Hevi-Bar II Overview

Ace Crane
800-562-9840
sales@acecrane.com

The rugged Hevi-Bar II Conductor Bar System delivers reliable, high-capacity electrical performance. It is ideal for tough environments and demanding, heavy-use applications found in mills, heavy industry, storage yards, and transit systems. It is truly a "put it up once and forget it" system that will last for the life of your equipment.

UL Listed

Hevi-Bar II is ideal for:

- Medium to large cranes
- Bulk Handling Systems
- Mills and heavy industry
- Transit Systems
- Material Handling Equipment
- Other mobile power applications

Ampacity Selections: 500A, 700A, 1000A, and 1500A, at 600 volts.

Maximum Speed: 2000 feet per minute
(Contact the factory if higher speeds are needed)

Hevi-Bar II Features

- Uses surface area rather than mass to dissipate heat generated by high current conditions
- Can be mounted horizontally or vertically ("side entry")
- V-grooved for positive and accurate collector shoe tracking
- Has hardened, long-wearing and corrosion resistant stainless steel contact surface.
- Offers a choice of insulating covers:
  - Standard orange for indoor use
  - Green for the ground (bonding) conductor
  - Black UV-resistant for outdoor use
  - Medium or high heat versions to withstand higher ambient temperatures

Hevi Bar II is easy to install and maintain. For further information, please download the Hevi Bar II manual from our web site.

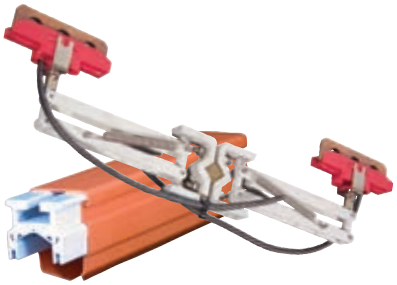

DURA-COAT Option - for Hevi-Bar II

Hevi-Bar II is available with our optional **DURA-COAT** finish, specially formulated for extremely corrosive environments. This coating combines a ceramic compound with an epoxy binder to provide superior corrosion resistance and adhesion to the base materials. The entire bar is coated, with the exception of the stainless steel running surface. The insulating cover is applied over the coating. All metal parts of the collector arm are coated.

DURA-COAT is ideal for galvanizing and electro-plating lines, chemical plants, smelters, foundries and cast houses, coke and ore handling cranes, and oxidizing/electro-winning facilities.

Contact Conductix-Wampfler for further information about **DURA-COAT.**

For a list of job references, contact Conductix-Wampfler

Hevi-Bar II Typical 4-Bar System

Ace Crane
800-562-9840
sales@acecrane.com

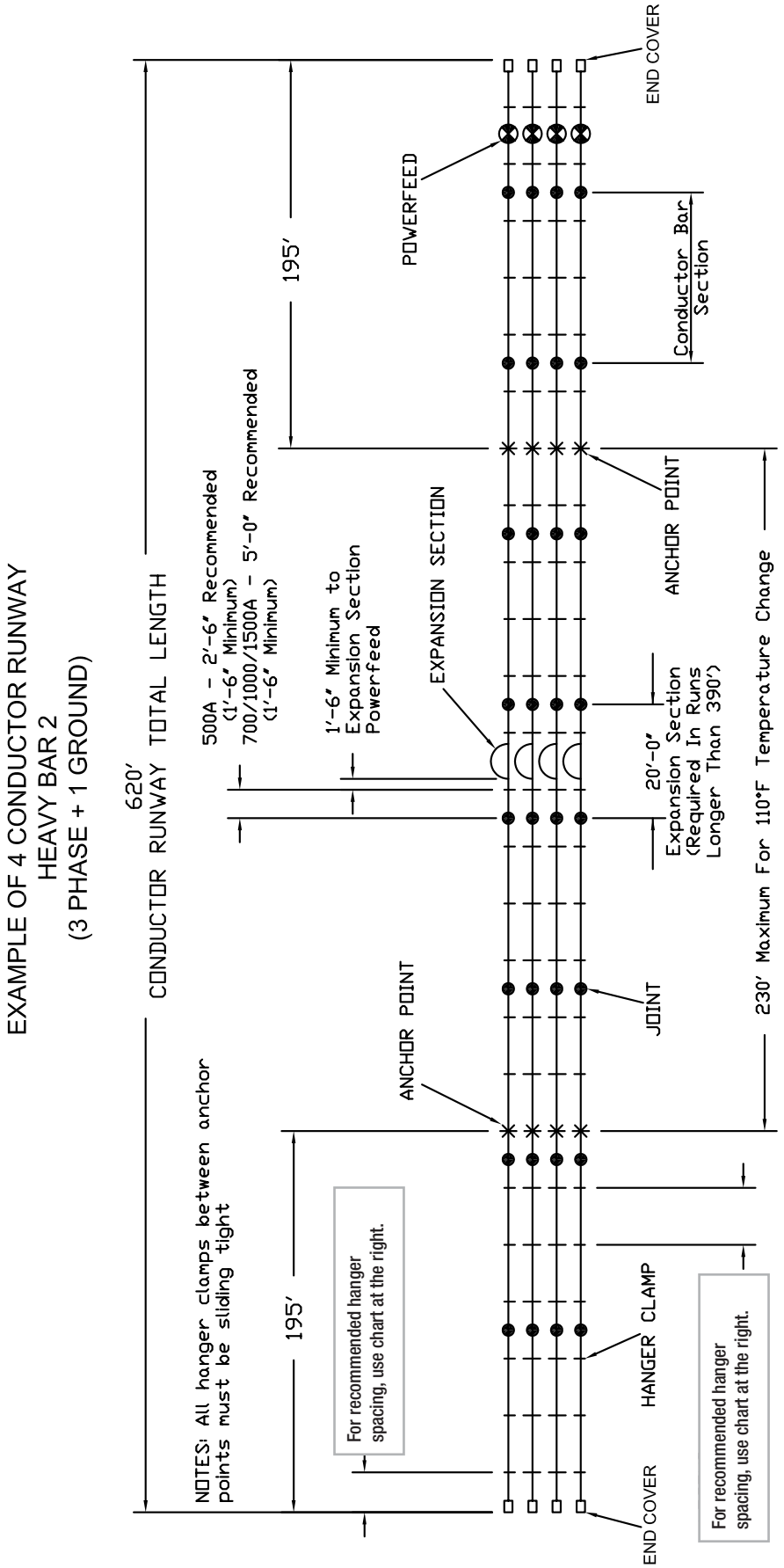

HANGER SPACING CHART

SYSTEM	FIRST HANGER	MAX.HANGER SPACING
500 AMP	2'-6"	5'-0"
700 AMP	3'-9"	7'-6"
1000 AMP	5'-0"	10'-0"
1500 AMP	5'-0"	10'-0"

Hevi-Bar II - 500A Conductors

Ace Crane
800-562-9840
sales@acecrane.com

Standard Conductor Bar and Components

Type / Max Temp.	Use (Color)	Conductor Bar	Conductor Bar Cut Lgth (Specify 5 to 29 ft)	Expansion Section	Splice	Power Feed	Power Interrupting Section ◆	End Cover
PVC 160^0 F	Phase / Indoors (Orange)	**27582**	**27583**	**37677**	**37676**	**37674**	**50746**	**27588**
	Ground / Indoors (Green)	**50258**	**50260**	**37677E**	**37676**	**37674**	**N/A**	**27588**
	Phase & Ground / Outdoors UV Stable (Black)	**38925**	**38926**	**38946**	**37676**	**37674**	**50746B**	**27588**
Poly - carbonate 250^{0}F	Phase & Ground / Indoors & Outdoors (Red)	**32496**	**39225**	**32498**	**32499**	**32500**	**50747**	**27588**
Wt lb (kg)		26.0 (11.79)	.87 lb/ft. (1.29 kg/m)	30.0 (13.61)	1.2 (0.681)	0.9 (0.408)	50 (22.67)	0.1 (0.045)
Length ft (m)		30.0 (9.114)	✱	30.0 (9.114)	/	/	30.0 (9.114)	/

◆ See Appendix IV Pgs. 63-64.

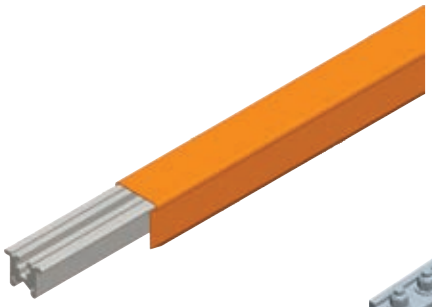

Conductor Bar

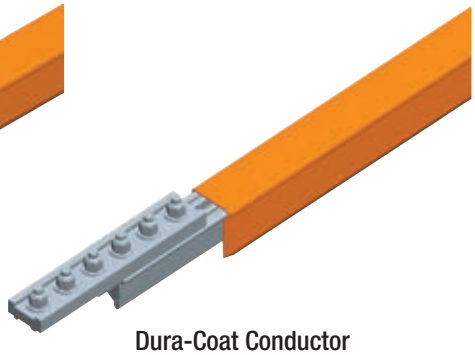

Dura-Coat Conductor Bar with Splice

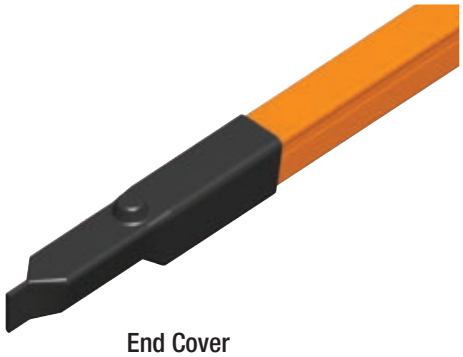

End Cover

Expansion Sections and Power Feed

Expansion Sections are required at all structural expansion joints and for all systems greater than 390 ft (118.87 m). See table above for expansion and power feed part numbers.

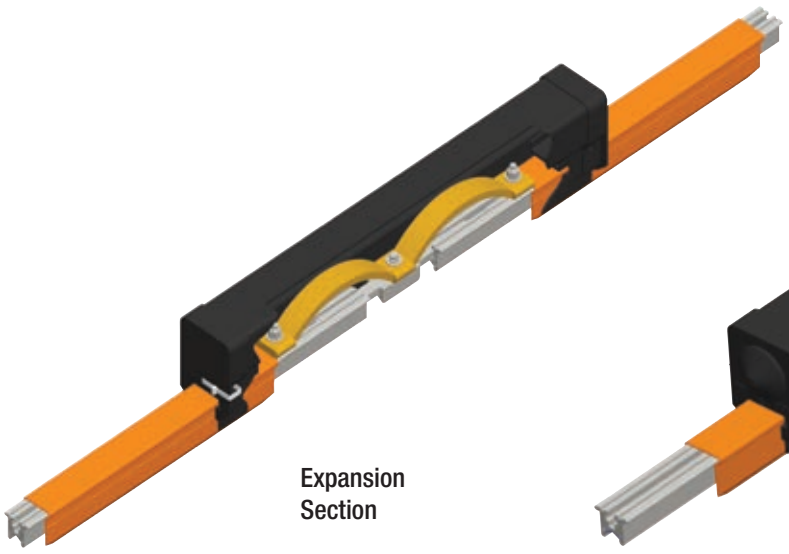

Expansion Section

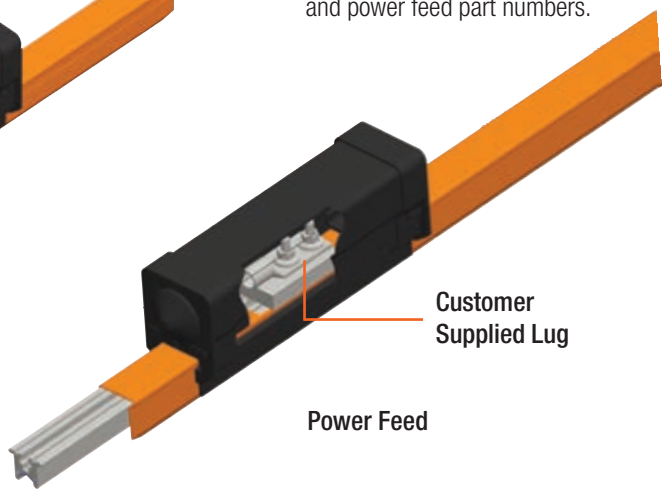

Power Feed

Hevi-Bar II - 500A DURA-COAT & Hangers

DURA-COAT Conductor Bar & Components

The ideal option for highly corrosive environments. Splices are pre-installed on Dura-Coat conductors.

Type / Max Temp.	Use (Color)	Conductor Bar	Conductor Bar Cut Lgth (Specify 5 to 29 ft)	Expansion Section	Splice Cover	Power Feed	Power Interrupting Section ◆	End Cover
PVC 160^0 F	Phase / Indoors (Orange)	**39745-J**	**39747-J**	**39741-J**	**51304**	**37674**	**50749-J**	**27588**
	Ground / Indoors (Green)	**39745G-J**	**51861-J**	**39741G-J**	**51304**	**37674**	**N/A**	**27588**
	Phase & Ground / Outdoors UV Stable (Black)	**39745B-J**	**51367-J**	**39741B-J**	**51304**	**37674**	**50749B-J**	**27588**
Poly-carbonate 250^{0}F	Phase & Ground / Indoors & Outdoors (Red)	**50731-J**	**51383-J**	**50741-J**	**51305**	**32500**	**50750-J**	**27588**
Wt lb (kg)		27.0 (12.24)	0.90 lb/ft (1.34 kg/m)	28 (12.7)	0.73 (0.33)	4.0 (1.81)	50 (22.67)	1.0 (0.45)
Length ft (m)		30.0 (9.144)	-	30.0 (9.14)	/	/	30.0 (9.14)	/

◆ See Appendix IV Pgs. 63-64.

Hangers

Hangers can be installed on brackets up to 3/8" thick (9.5mm).

Polycarbonate Snap-In

Polycarbonate Snap-in w/Insulator

Stainless Steel Cross Bolt

Stainless Steel Cross Bolt w/Insulator

Hangers - Used with 500A Bar Only	Plated Hardware	Stainless Steel Hardware	Wt lb (kg)
Polycarbonate Snap-In	**26591**	**28368**	0.29 (0.14)
Polycarbonate Snap-in w/Insulator	**27483**	**27780**	0.89 (0.40)
Stainless Steel Cross Bolt	**27481**	**27788**	0.60 (0.27)
Stainless Steel Cross Bolt w/Insulator	**27482**	**29574**	1.14 (0.50)

Anchor Pin

Anchor Pin	Part No.	Wt lb (kg)
Anchor Pin (2 Req'd Per Hanger to turn a hanger into an anchor)	**23946**	.1 (0.05)

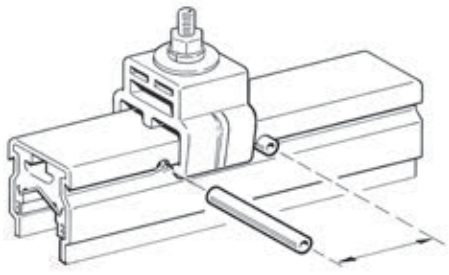

Anchor Pin 23946 (Two Shown)

Hevi-Bar II - 700A Conductors

Ace Crane
800-562-9840
sales@acecrane.com

Standard Conductor Bar and Components

Type / Max Temp.	Use (Color)	Conductor Bar	Conductor Bar Cut Lgth (Specify 5 to 29 ft)	Expansion Section	Splice	Power Feed	Power Interrupting Section ◆	End Cover
PVC 160^0 F	Phase / Indoors (Orange)	**24528**	**24529**	**24566**	**38115**	**38117**	**50748**	**50859**
	Ground / Indoors (Green)	**24528B**	**51369**	**24566B**	**38115**	**38117**	**N/A**	**50859**
	Phase & Ground / Outdoors UV Stable (Black)	**38934**	**38936**	**38949**	**38115**	**38117**	**50748B**	**50859**
Poly Carbonate 250^{0}F	Phase & Ground / Indoors & Outdoors (Red)	**50733**	**51371**	**50738**	**38115C**	**50067**	**50752**	**50859**
Fiberglass Reinforced Polyester 400^{0}F	Phase & Ground / Indoors (Orange)	**24554**	**24555**	**24567D**	**24558**	**24594**	**50754**	**24585**
Wt lb (kg)		34.0 (15.42)	1.13 lb/ft (1.69 kg/m)	24.0 (10.86)	1.9 (0.86)	1.4 (0.64)	66.0 (29.93)	1.8 (0.82)
Length ft (m)		30.0 (9.114)	✱	15.0 (4.572)	/	/	30.0 (9.114)	/

◆ See Appendix IV Pgs. 63-64.

Conductor Bar

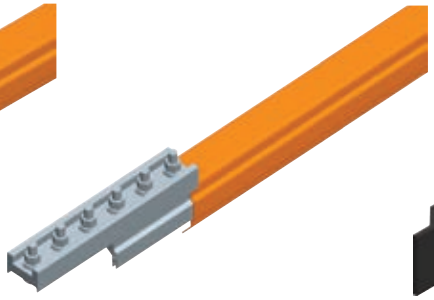

Dura-Coat Conductor Bar with Splice

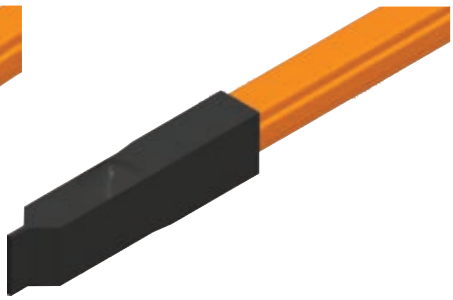

End Cover

Expansion Sections and Power Feed

Expansion Sections are required at all structural expansion joints and for all systems greater than 390 ft (118.87 m). See table above for expansion and power feed part numbers.

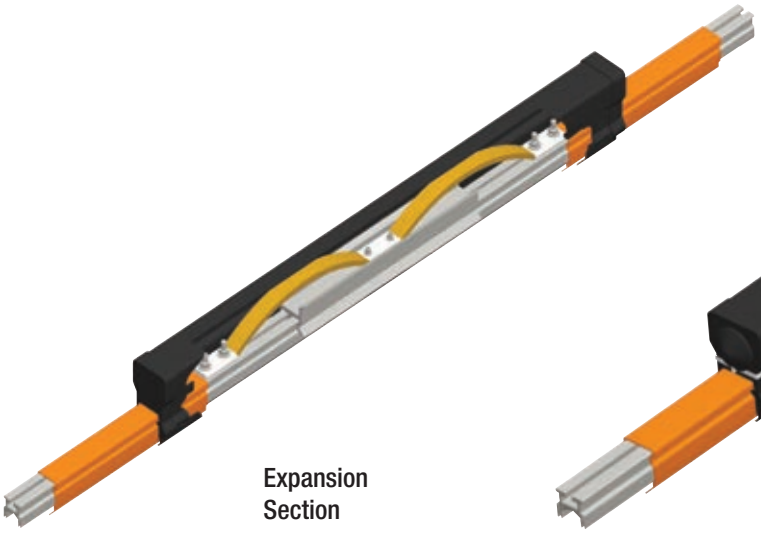

Expansion Section

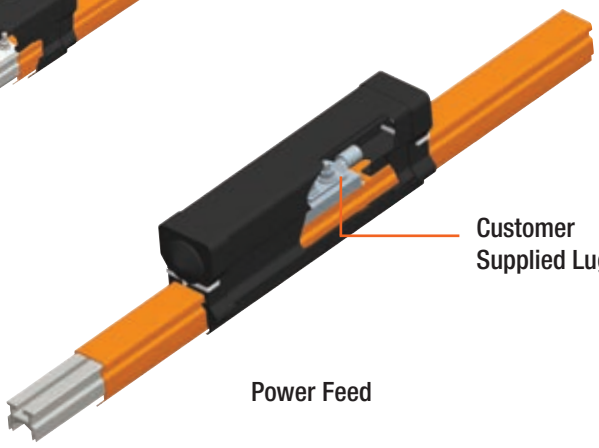

Power Feed

Hevi-Bar II - 700A DURA-COAT & Hangers

Ace Crane
800-562-9840
sales@acecrane.com

DURA-COAT Conductor Bar & Components

The ideal option for highly corrosive environments Splices are pre-installed on Dura-Coat conductors.

Type / Max Temp.	Use (Color)	Conductor Bar	Conductor Bar Cut Lgth (Specify 5 to 29 ft)	Expansion Section	Splice Cover	Power Feed	Power Interrupting Section ◆	End Cover
PVC 160° F	Phase / Indoors (Orange)	**39847-J**	**51372-J**	**50739-J**	**51320**	**38117**	**50751-J**	**50859**
	Ground / Indoors (Green)	**39847G-J**	**51862-J**	**50739B-J**	**51320**	**38117**	**N/A**	**50859**
	Phase & Ground / Outdoors UV Stable (Black)	**39847B-J**	**51376-J**	**50740-J**	**51320**	**38117**	**50751B-J**	**50859**
Poly - carbonate 250°F	Phase & Ground / Indoors & Outdoors (Red)	**50062-J**	**51374-J**	**50063-J**	**51321**	**50067**	**50753-J**	**50859**
Wt lb (kg)		35.0 (15.87)	1.17 lb/ft (1.74 kg/m)	25.0 (11.33)	0.7 (0.31)	5.0 (2.268)	66.0 (29.93)	2.0 (0.907)
Length ft (m)		30.0 (9.114)	-	15.0 (4.57)	1.5 (0.457)	1.5 (0.457)	30.0 (9.114)	1.5 (0.457)

◆ See Appendix IV Pgs. 63-64.

Hangers

Hangers can be installed on brackets up to 3/8" thick (9.5mm).

Hangers - Used with 700 to 1500A Bar	Plated Hardware	Stainless Steel Hardware	High Temp.	Wt lb (kg)
Polycarbonate Snap-In	**23223**	**28220**	**N/A**	0.27 (0.13)
Polycarbonate Snap-in w/insulator	**24902**	**24902B**	**N/A**	0.83 (0.40)
Stainless Steel Cross Bolt	**27481**	**27788**	**51972**	0.58 (0.28)
Stainless Steel Cross Bolt w/insulator	**27482**	**32807**	**24973**	1.11 (0.53)

Polycarbonate Snap-In

Polycarbonate Snap-in w/Insulator

Stainless Steel Cross Bolt

Stainless Steel Cross Bolt w/Insulator

Anchor Pin

Anchor Pin	Part No.	Wt lb (kg)
Anchor Pin (2 Req'd Per Hanger to turn a hanger into an anchor)	**23946**	.1 (0.05)

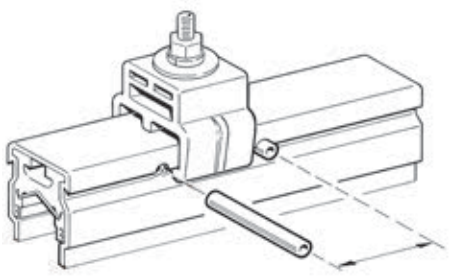

Anchor Pin 23946 (Two Shown)

Hevi-Bar II - 1000A Conductors

Ace Crane
800-562-9840
sales@acecrane.com

Standard Conductor Bar and Components

Type / Max Temp.	Use (Color)	Conductor Bar	Conductor Bar Cut Lgth (Specify 5 to 29 ft)	Expansion Section	Splice	Power Feed	Power Interrupting Section ◆	End Cover
PVC 160⁰ F	Phase / Indoors (Orange)	**23500**	**23503**	**23512**	**37746**	**38184**	**50755**	**33796B**
	Phase & Ground / Outdoors UV Stable (Black)	**23500D**	**38938**	**23512C**	**37746**	**38184**	**50755B**	**33796B**
Poly - carbonate 250⁰F	Phase & Ground / Indoors & Outdoors (Red)	**31991**	**51408**	**50941**	**31964**	**38184D**	**50756**	**33796B**
Fiberglass Reinforced Polyester 400⁰F	Phase & Ground / Indoors (Orange)	**23508**	**23511**	**23514**	**23520**	**23530**	**50757**	**23523**
Wt (lb)		48 (21.77)	1.6 lb/ft (2.39 kg/m)	60 (27.21)	3.0 (1.36)	1.5 (0.68)	79 (35.83)	1.3 (0.59)
Length (ft.)		30	-	20.0	/	/	30.0	/

◆ See Appendix IV Pg. 63-64.

Conductor Bar

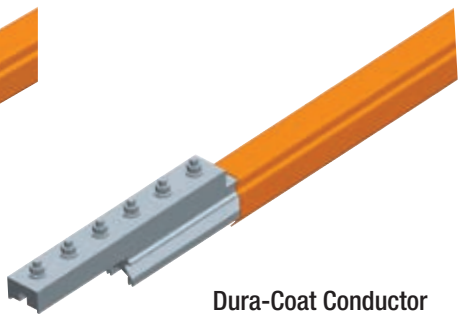

Dura-Coat Conductor Bar with Splice

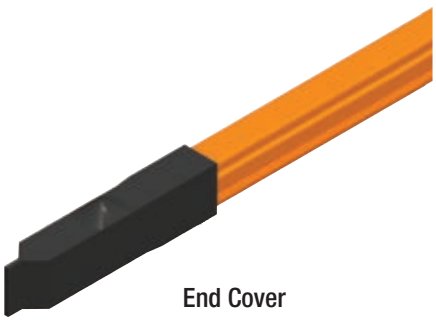

End Cover

Expansion Sections and Power Feed

Expansion Sections are required at all structural expansion joints and for all systems greater than 390 ft (118.87 m). See table above for expansion and power feed part numbers.

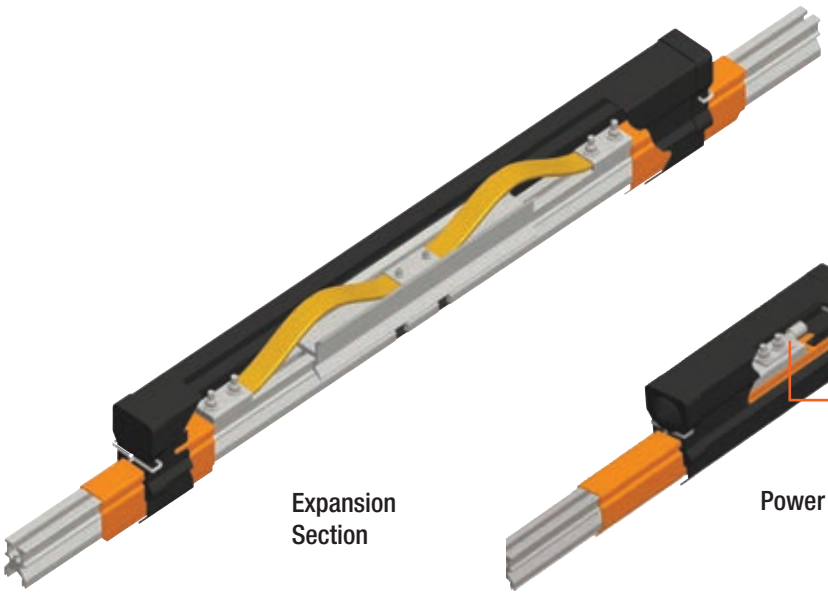

Expansion Section

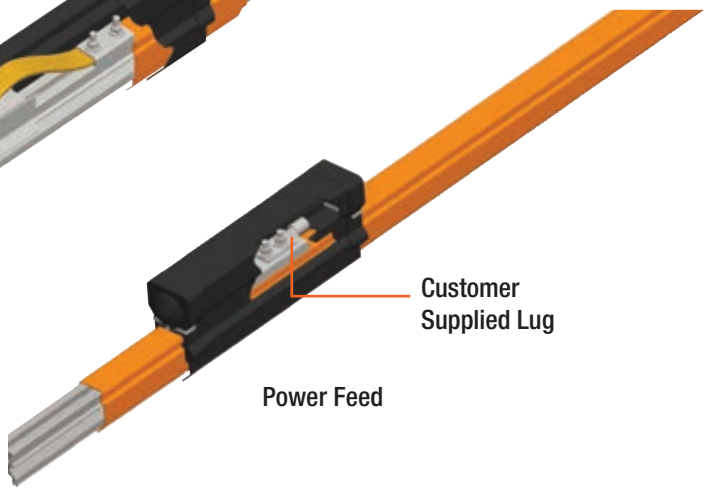

Power Feed

Hevi-Bar II - 1000A DURA-COAT & Hangers

Ace Crane
800-562-9840
sales@acecrane.com

DURA-COAT Conductor Bar & Components

The ideal option for highly corrosive environments Splices are pre-installed on Dura-Coat conductors.

Type / Max Temp.	Use (Color)	Conductor Bar	Conductor Bar Cut Lgth (Specify 5 to 29 ft)	Expansion Section	Splice Cover	Power Feed	Power Interrupting Section ◆	End Cover
PVC 160° F	Phase / Indoors (Orange)	**50736-J**	**51377-J**	**50743-J**	**51322**	**38184**	**50758-J**	**33796B**
	Phase & Ground / Outdoors UV Stable (Black)	**50736B-J**	**51381-J**	**50743B-J**	**51322**	**38184**	**50758B-J**	**33796B**
Poly - carbonate 250°F	Phase & Ground / Indoors & Outdoors (Red)	**50735-J**	**51379-J**	**50817-J**	**534845**	**38184D**	**50759-J**	**33796B**
Wt lb (kg)		49 (22.22)	1.63 lb/ft (2.44 kg/m)	40 (18.14)	1.2 (0.54)	6.5 (2.95)	77 (34.92)	1.5 (0.68)
Length ft (kg)		30 (9.114)	*	20 (6.096)	/	/	30 (9.114)	/

◆ See Appendix IV Pgs. 63-64.

Hangers

Hangers can be installed on brackets up to 1/2" thick (12.7mm).

Hangers - Used with 700 to 1500A Bar	Plated Hardware	Stainless Steel Hardware	High Temp.	Wt lb (kg)
Polycarbonate Snap-In	**23223**	**28220**	**N/A**	0.28 (0.13)
Polycarbonate Snap-in w/insulator	**24902**	**24902B**	**N/A**	0.87 (0.40)
Stainless Steel Cross Bolt	**27481**	**27788**	**51972**	0.61 (0.28)
Stainless Steel Cross Bolt w/insulator	**27482**	**32807**	**24973**	1.16 (0.53)

Polycarbonate Snap-In

Polycarbonate Snap-in w/Insulator

Stainless Steel Cross Bolt

Stainless Steel Cross Bolt w/Insulator

Anchor Pin

Anchor Pin	Part No.	Wt lb (kg)
Anchor Pin (2 Req'd Per Hanger to turn a hanger into an anchor)	**23946**	.1 (0.05)

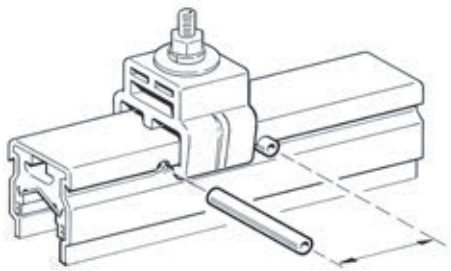

Anchor Pin 23946 (Two Shown)

Hevi-Bar II - 1500A Conductors

Ace Crane
800-562-9840
sales@acecrane.com

Standard Conductor Bar and Components

Type / Max Temp.	Use (Color)	Conductor Bar	Conductor Bar Cut Lgth (Specify 5 to 29 ft)	Expansion Section	Splice	Power Feed	Power Interrupting Section ◆	End Cover
PVC 160^0 F	Phase / Indoors (Orange)	**24000**	**24003**	**32820**	**38968**	**50227**	**50760**	**33796B**
	Phase & Ground / Outdoors UV Stable (Black)	**24000C**	**38944**	**38952**	**38968**	**50227**	**50760B**	**33796B**
Poly - carbonate 250^{0}F	Phase & Ground / Indoors & Outdoors (Red)	**39296**	**39296**	**39287**	**34802**	**50227C**	**50761**	**33796B**
Wt lb (kg)		96 (43.54)	3.2 lb/ft (4.78 kg/m)	71 (32.2)	3.8 (1.72)	2.1 (0.95)	123.0 (55.8)	1.5 (0.680)
Length ft (m)		30 (9.114)	-	20 (6.10)	/	/	30 (9.114)	/

◆ See Appendix IV Pgs. 63-64.

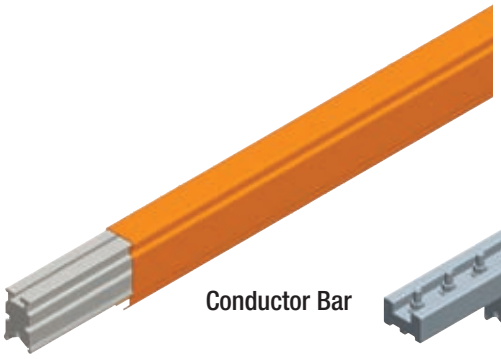

Conductor Bar

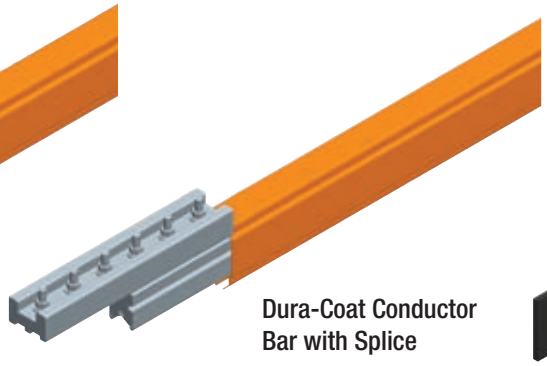

Dura-Coat Conductor Bar with Splice

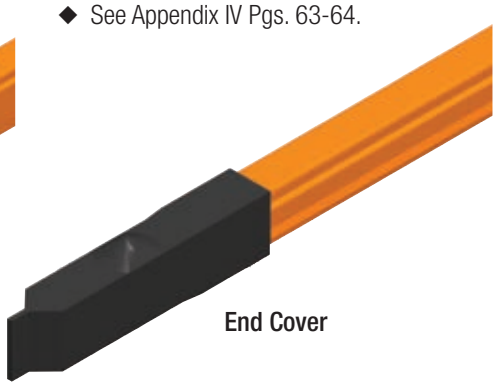

End Cover

Expansion Sections and Power Feed

Expansion Sections are required at all structural expansion joints and for all systems greater than 390 ft (118.87 m). See table above for expansion and power feed part numbers.

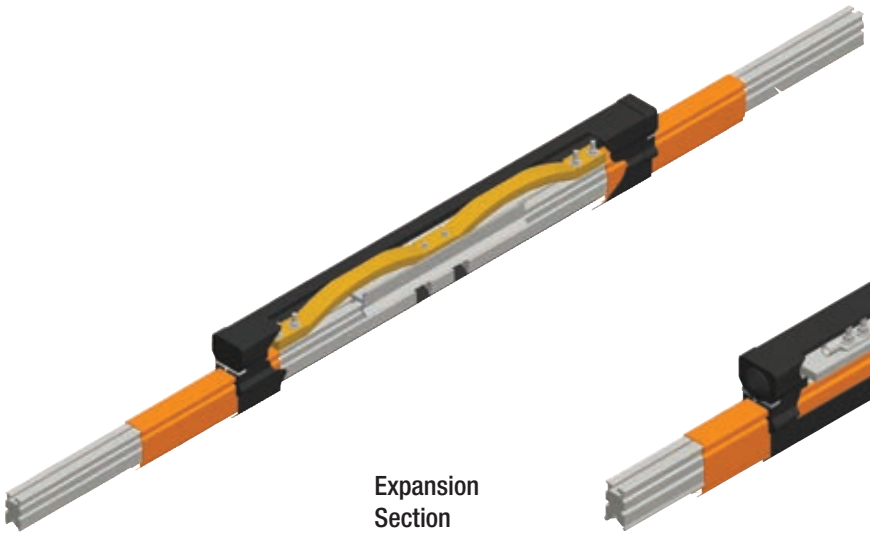

Expansion Section

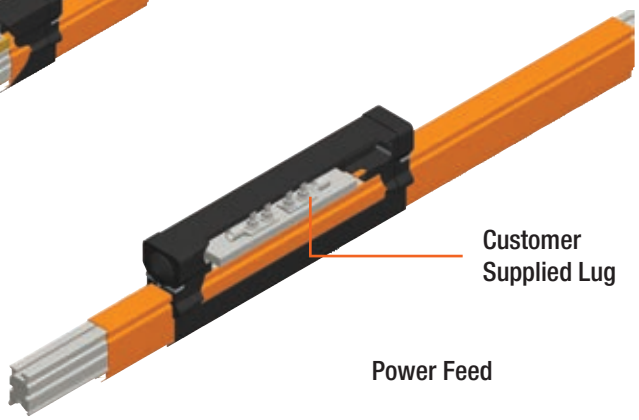

Power Feed

Hevi-Bar II - 1500A DURA-COAT & Hangers

Ace Crane
800-562-9840
sales@acecrane.com

DURA-COAT Conductor Bar & Components

The ideal option for highly corrosive environments Splices are pre-installed on Dura-Coat conductors.

Type / Max Temp.	Use (Color)	Conductor Bar	Conductor Bar Cut Lgth (Specify 5 to 29 ft)	Expansion Section	Splice Cover	Power Feed	Power Interrupting Section ◆	End Cover
PVC 160^0 F	Phase / Indoors (Orange)	**50734-J**	**51382-J**	**50742-J**	**51297**	**50227**	**50762-J**	**33796B**
	Phase & Ground / Outdoors UV Stable (Black)	**50734B-J**	**50230-J**	**50742B-J**	**51297**	**50227**	**50762B-J**	**33796B**
Poly - carbonate 250^{0}F	Phase & Ground / Indoors & Outdoors (Red)	**39430-J**	**39430-J**	**50060-J**	**51297B**	**50227C**	**50763-J**	**33796B**
Wt lb (m)		97 (44)	3.23 lb/ft (4.83 kg/m)	72 (36.65)	1.41 (0.64)	130 (58.97)	126 (57.15)	1.5 (0.68)
Length ft (m)		30.0 (9.144)	-	20.0 (6.10)	/	/	30.0 (9.144)	/

◆ See Appendix IV Pgs. 63-64.

Hangers

Hangers can be installed on brackets up to 1/2" thick (12.7mm).

Hangers - Used with 700 to 1500A Bar	Plated Hardware	Stainless Steel Hardware	High Temp.	Wt lb (kg)
Polycarbonate Snap-In	**23223**	**28220**	**N/A**	0.28 (0.127)
Polycarbonate Snap-in w/insulator	**24902**	**24902B**	**N/A**	0.87 (0.395)
Stainless Steel Cross Bolt	**27481**	**27788**	**51972**	0.61 (0.277)
Stainless Steel Cross Bolt w/insulator	**27482**	**32807**	**24973**	1.16 (0.526)

Polycarbonate Snap-In

Polycarbonate Snap-in w/Insulator

Stainless Steel Cross Bolt

Stainless Steel Cross Bolt w/Insulator

Anchor Pin

Anchor Pin	Part No.	Wt lb (kg)
Anchor Pin (2 Req'd Per Hanger to turn a hanger into an anchor)	**23946**	.1 (0.05)

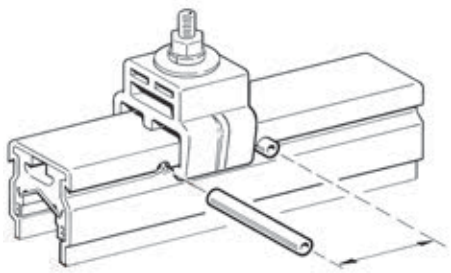

Anchor Pin 23946 (Two Shown)

Hevi-Bar II Collectors & Replacement Shoes

All collectors include long-wearing copper graphite shoes in holders and "pigtail" wiring as noted below. For recommendations about choosing collectors, see Appendix I Pgs. 57-60.

Single Collector - 125 Amp

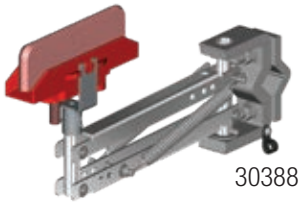

30388 - Pigtails not shown

21" long pigtails, 4 AWG, are supplied on the collector. Customer supplied wiring connects to the collector pigtail with in-line connectors. **Used on 500A conductor bar only.**

TYPE	Cap. (amps)	Part No.	Wt lb (kg)
Standard Collector with Shoe	125	**30388**	3.50 (1.58)
Stainless Steel Collector with Shoe	125	**50205**	3.58 (1.76)
Lateral Mount Collector with Shoe	125	**532272**	3.36 (1.52)
Replacement Shoe	125	**30516**	1.00 (0.45)
Cast Iron Cleaning Shoe	n/a	**39166**	1.38 (0.63)

Tandem Collector - 250 Amp

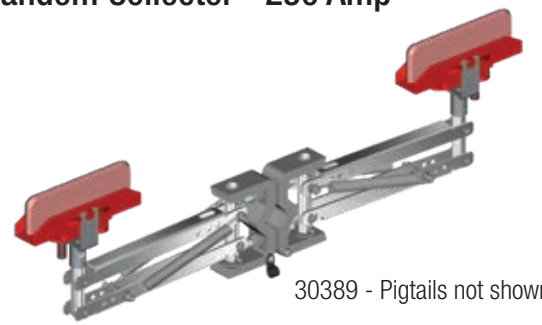

30389 - Pigtails not shown

21" long pigtails, 4 AWG, are supplied on the collector. Customer supplied wiring connects to the collector pigtail with in-line connectors. **Used on 500A conductor bar only.**

TYPE	Cap. (amps)	Part No.	Wt lb (kg)
Standard Collector with Shoes	250	**30389**	6.54 (2.96)
Stainless Steel Collector with Shoes	250	**39752**	6.76 (3.06)
Lateral Mount Collector with Shoes	250	**532273**	6.39 (2.90)
Replacement Shoe 2 required per collector	250	**30516**	1.0 (0.45)
Cast Iron Cleaning Shoe 2 required per collector	n/a	**39166**	1.38 (0.63)

Single Collector - 200 I 300 Amp

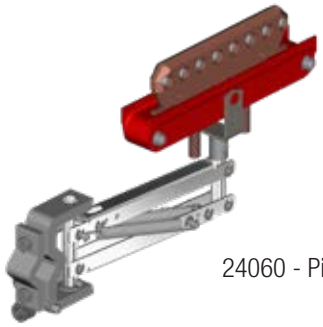

24060 - Pigtails not shown

42" long pigtails, 2 AWG, are supplied on the collector. Customer supplied wiring connects to the collector pigtail with in-line connectors. **Used on 700A - 1500A conductor bar only.** Note that the 300A version is the same as the 200A, except with an extra tension spring on the arm.

TYPE	Cap. (amps)	Part No.	Wt lb (kg)
Standard Collector with Shoe	200	**24060**	6.79 (3.08)
Stainless Steel Collector with Shoe	200	**51522**	6.87 (3.11)
Standard Collector with Shoe	300	**24060Q**	6.89 (3.12)
Lateral Mount Collector with Shoe	200	**31933**	4.80 (2.18)
Replacement Shoe	200	**11417X**	0.76 (0.34)
Cast Iron Cleaning Shoe	n/a	**28267**	1.0 (0.45)

Tandem Collector - 400 Amp

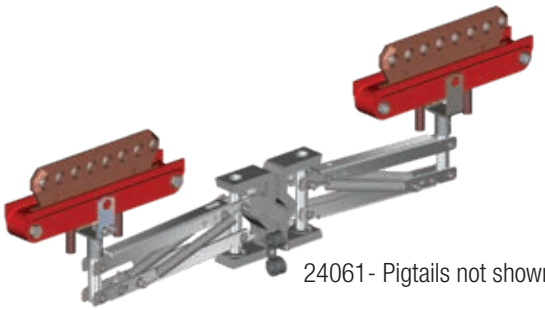

24061- Pigtails not shown

42" long pigtails, 2 AWG, are supplied on the collector. Customer supplied wiring connects to the collector pigtail with in-line connectors. **Used on 700A - 1500A conductor bar only.** Note that the 600A version is the same as the 400A, except with one extra tension spring on each arm.

TYPE	Cap. (amps)	Part No.	Wt lb (kg)
Standard Collector with Shoes	400	**24061**	13.31 (6.04)
Stainless Steel Collector with Shoes	400	**39848**	13.25 (6.01)
600A Standard Collector with Shoes	600	**24061B**	13.31 (6.04)
Lateral Mount Collector with Shoes	400	**32111D**	21.36 (9.69)
Replacement Shoe (2 required/collector)	400	**11417X**	0.38 (0.17)
Cast Iron Cleaning Shoe (2 required /collector)	n/a	**28267**	1.0 (0.45)

Hevi-Bar II 500A - 700A Support Brackets

The Hevi-Bar II Support Brackets listed below are for 500A - 700A conductors. They are available in three types as listed below and can be ordered in five different configurations:

- Bracket only (no hangers included)
- Bracket with four pre-installed hangers - standard Polycarbonate
- Bracket with four pre-installed hangers - standard Polycarbonate w/insulators
- Bracket with four pre-installed hangers - stainless steel cross-bolt
- Bracket with four pre-installed hangers - stainless steel cross-bolt w/insulators

All holes to accept hangers are 3" on-center and .56" diameter.

Web Bracket

Mounts to vertical web of beam. Bracket is 2" wide by 3/8" thick.
✱ Brackets 33655 & 35337 are 1/2" thick

For Bar	Bracket Finish	Dim X inches (mm)	Dim Y Inches (mm)	Part No. Bracket Only	Wt lb (kg)	Part Nos. - With Four Hangers Pre-Installed: Standard Polycarbonate	Standard Polycarbonate w/Insulators	Stainless Steel Cross-Bolt	Stainless Steel Cross-Bolt w/Insulator
500A	Plated Steel	6.0 (152)	16.25 (413)	**29441**	4.4 (2.996)	**29440**	**29440B**	**29440C**	**29440D**
	Plated Steel	9.0 (229)	19.25 (489)	**30503**	5.1 (2.313)	**51785**	**51785B**	**51785C**	**51785D**
	Plated Steel	11.0 (279)	21.25 (540)	**33655**	7.3 (3.311)	**38268**	**38268B**	**38268C**	**38268D**
	Stainless Steel	9.0 (229)	19.25 (489)	**35337**	6.7 (3.309)	**51786**	**51786B**	**51786C**	**51786D**
	Hot Dip Galv.	9.0 (229)	19.25 (489)	**30697**	5.1 (2.313)	**34814**	**34814B**	**34814C**	**34814D**
700A	Plated Steel	6.0 (152)	16.25 (413)	**29441**	4.4 (2.996)	**537794**	**537794B**	**537794C**	**537794D**
	Plated Steel	9.0 (229)	19.25 (489)	**30503**	5.1 (2.313)	**537796**	**537796B**	**537796C**	**537796D**
	Plated Steel	11.0 (279)	21.25 (540)	**33655**	7.3 (3.311)	**537795**	**537795B**	**537795C**	**537795D**
	Hot Dip Galv	9.0 (229)	19.25 (489)	**30697**	5.1 (2.313)	**537797**	**537797B**	**537797C**	**537797D**

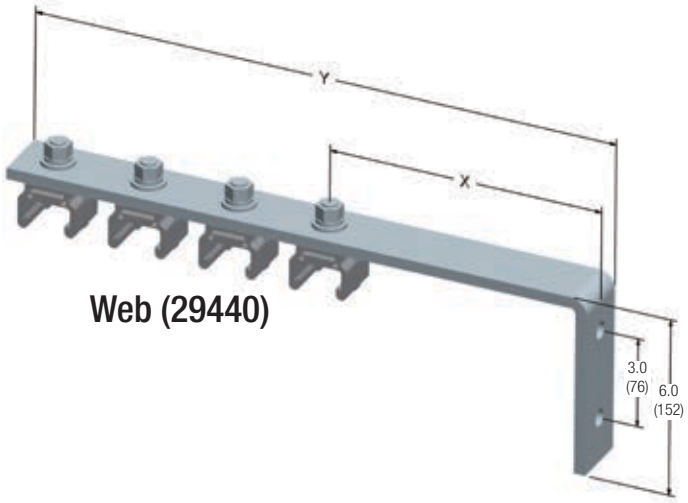

Web (29440)

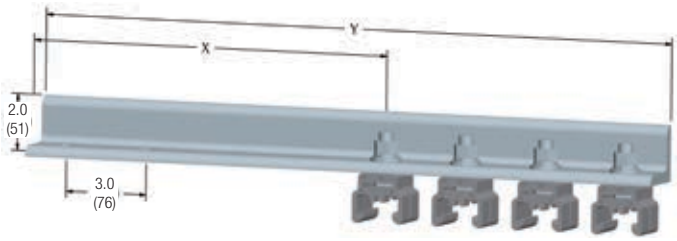

Flange (30493)

Flange Bracket

Mounts to top flange of beam. Bracket is a 2"x 2" angle, by 3/8" thick. The first hole is 1 1/4" from the end.

For Bar	Bracket Finish	Dim X Inches (mm)	Dim Y Inches (mm)	Part No. Bracket Only	Wt lb (kg)	Part Nos. - With Four Hangers Pre-Installed: Standard Polycarbonate	Standard Polycarbonate w/Insulators	Stainless Steel Cross-Bolt	Stainless Steel Cross-Bolt w/Insulator
500A	Plated Steel	13.25 (337)	23.50 (597)	**30529**	8.8 (3.992)	**30493**	**30493B**	**30493C**	**30493D**
700A	Plated Steel	13.25 (337)	23.50 (597)	**30529**	8.8 (3.992)	**51878**	**51878B**	**51878C**	**51878D**

Hevi-Bar II 1000A - 1500A Support Brackets

The Hevi-Bar II Support Brackets listed below are for 1000A or 1500A conductors. They are available in three types as listed below, and can be ordered in five different configurations:

- Bracket only (no hangers included)
- Bracket with four pre-installed hangers - standard Polycarbonate
- Bracket with four pre-installed hangers - standard Polycarbonate w/insulators
- Bracket with four pre-installed hangers - stainless steel cross-bolt
- Bracket with four pre-installed hangers - stainless steel cross-bolt w/insulators

All holes to accept hangers are 3" on-center and .56" diameter.

Web Bracket

Mounts to vertical web of beam. Bracket is 2" wide by 1/2" thick.

					Part No. - With Four Hangers Pre-Installed			
Bracket Finish	Dim X Inches (mm)	Dim Y Inches (mm)	Part No. Bracket Only	Wt (lb)	Standard Polycarbonate	Standard Polycarbonate w/Insulators	Stainless Steel Cross-Bolt	Stainless Steel Cross-Bolt w/Insulator
Plated Steel	6.0 (152)	16.25 (413)	**537552**	5.6	**32893**	**32893B**	**32893C**	**32893D**
Plated Steel	9.0 (229)	19.25 (489)	**537554**	6.2	**39923**	**39923B**	**39923C**	**39923D**
Hot Dip Galv.	9.0 (229)	19.25 (489)	**537555**	6.2	**32932**	**32932B**	**32932C**	**32932D**

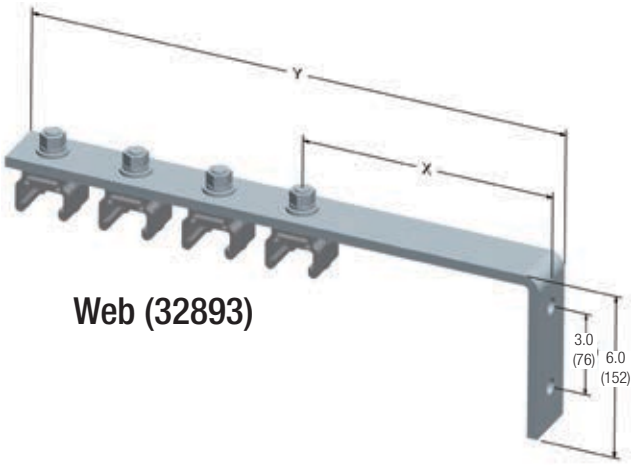

Web (32893)

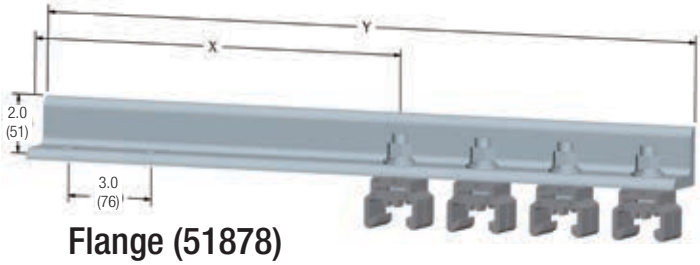

Flange (51878)

Flange Bracket

Mounts to top flange of beam. Bracket is a 2"x 2" angle, by 3/8" thick. The first hole is 1 1/4" from the end.

					Part Nos. - With Four Hangers Pre-Installed			
Bracket Finish	Dim X Inches (mm)	Dim Y Inches (mm)	Part No. Bracket Only	Wt (lb)	Standard Polycarbonate	Standard Polycarbonate w/Insulators	Stainless Steel Cross-Bolt	Stainless Steel Cross-Bolt w/Insulator
Plated Steel	13.25 (337)	23.50 (597)	**30529**	8.9	**51878**	**51878B**	**51878C**	**51878D**

Ace Crane
800-562-9840
sales@acecrane.com

Braced Web Bracket

Plated steel weldment with brace, used for heavier conductor bar (e.g. 1500A). Not for 500A bar.

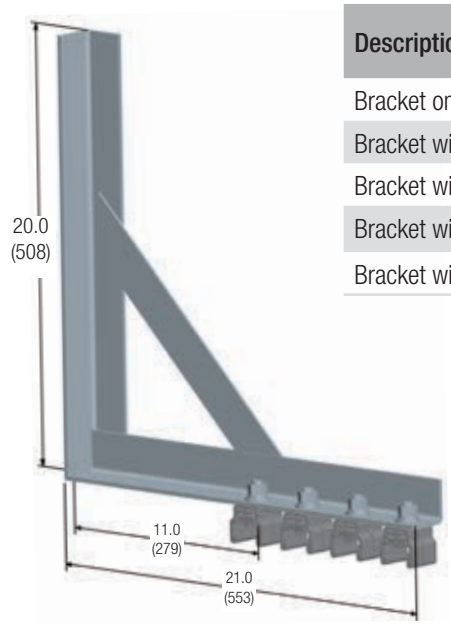

Braced Web (25691)

Description	Hanger Type	Part No.	Wt lb (kg)
Bracket only	n/a	**25720**	9.5 (4.30)
Bracket with 4 Hangers Installed	Polycarbonate (# 23223)	**25691**	4.4 (2.00)
Bracket with 4 Hangers Installed	Polycarbonate w/insulators (# 24902)	**25691B**	6.8 (3.08)
Bracket with 4 Hangers Installed	Stainless Steel Cross Bolt (# 27481)	**25691C**	5.7 (2.59)
Bracket with 4 Hangers Installed	Stainless Steel Cross Bolt w/Insulators (# 27482)	**25691D**	7.9 (3.58)

Lateral Bracket

Mounts to vertical web of beam to configure conductor bar one above the other. Bracket is 2" wide by 3/8" thick. Not for 500A bar.

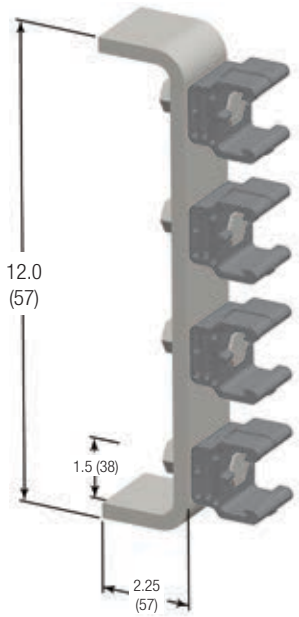

Lateral (51876)

Description	Hanger Type	Part No.	Wt lb (kg)
Bracket only	n/a	**50498**	3.1 (1.41)
Bracket with 4 Hangers Installed	Polycarbonate (# 23223)	**51876**	4.3 (1.95)
Bracket with 4 Hangers Installed	Polycarbonate w/insulators (# 24902)	**51876B**	6.7 (3.04)
Bracket with 4 Hangers Installed	Stainless Steel Cross Bolt (# 27481)	**51876C**	5.6 (2.54)
Bracket with 4 Hangers Installed	Stainless Steel Cross Bolt w/Insulators (# 27482)	**51876D**	7.8 (3.54)

Hevi-Bar II Specifications

Ace Crane
800-562-9840
sales@acecrane.com

Conductor Bar Cover

	Cover Type:				
	Standard (Ground)	**UV Resistant**	**Medium Heat**	**Hi Heat✱**	**Bare Bar**
Material	PVC	PVC	Lexan Polycarbonate	Fiberglass Reinforced	N/A
Color	Orange (Green)	Black	Red	Orange	no color
Normal Ambient	-40°F to 104°F -40°C to 40°C	-40°F to 104°F -40°C to 40°C	-40°F to 200°F -40°C to 93.3°C	-40°F to 345°F -40°C to 173.8°C	-40°F to 690°F -40°C to 365.5°C
Max. Temperature	160°F (71.1°C)	160°F (71.1°C)	250°F (121.1°C)	400°F (204.4°C)	750°F (398.8°C)
Material	PVC	PVC	Lexan Polycarbonate	Fiberglass	N/A
Dielectric Strength	450 volts/mil	450 volts/mil	600 volts/mil	200 volts/mil	N/A
Volume Resistivity	$>10^{12}$ (Ω/mil)	$>10^{12}$ (Ω/mil)	$>10^{13}$ (Ω/mil)	$>10^{11}$ (Ω/mil)	N/A
Flame Test	Self Extinguishing	Self Extinguishing	Self Extinguishing	Self Extinguishing	N/A
Specific Density	1.5 g/cm³	1.5 g/cm³	1.15 g/cm³	1.24 g/cm³	N/A

✱ 700A and 1000A only

Conductor Bar

	Nominal Current of Bar			
	500A	**700A**	**1000A**	**1500A**
Cross Sectional Area, in. (mm)	0.52 (333.5)	0.70 (451.6)	1.06 (680.6)	2.30 (1483.9)
AC & DC Voltage	600	600/4160	600/4160	600/4160
DC Resistance at 20°C (Ω/ft.)	3.27×10^{-5}	2.11×10^{-5}	1.41×10^{-5}	0.64×10^{-5}
Phase Corrected Impedance Z at 20°C (Ω/ft.)	5.40×10^{-5}	4.21×10^{-5}	3.39×10^{-5}	2.28×10^{-5}
Conductor Length, ft. (m)	30.0 (9.1)	30.0 (9.1)	30.0 (9.1)	30.0 (9.1)
Support Spacing, ft (m)	5 (1.52)	7.5 (2.28)	10 (3.05)	10 (3.05)
Spacing between Conductors, in (mm)	3.0 (76.2)	3.0 (76.2)	3.0 (76.2)	3.0 (76.2)
Expansion Sections not required for runs less than; ft. (m)	390 (11.9)	390 (11.9)	390 (11.9)	390 (11.9)
Minimum Bending Radius, ft (m)	8.0 (2.4)	10.0 (3.05)	12.0 (3.7)	15.0 (4.6)

Corrosion Protection

Hardware Type:	Duty
Zinc Plated	Moderate
Stainless Steel	Severe
DURA-COAT	Extreme Duty

Available Accessories (Contact Conductix-Wampfler)

- Thermostatically controlled heater wire system, for ice and snow environments (500A only)
- Transfer Caps for switches
- Pick-up Guides for discontinuous systems
- Vertical and horizontal curves

The appropriate conductor bar can be chosen only when all the relevant factors are known. Please refer to the Specification Data Sheet on Pg. 6, and to Appendices I through IV at the back of this catalog. Also, please consult Conductix-Wampfler Sales if you have any questions about the suitability of this product to your application.

Hevi-Bar II Installed Dimensions

Ace Crane
800-562-9840
sales@acecrane.com

500A - Standard Hanger

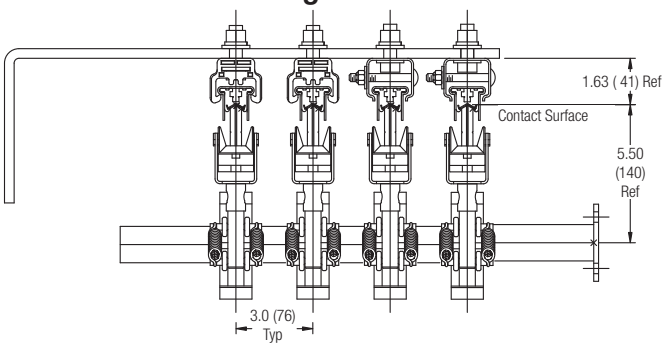

500A - with Insulators

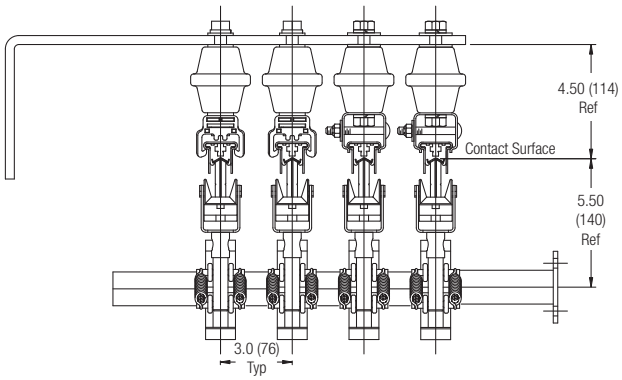

700A - Standard Hangers

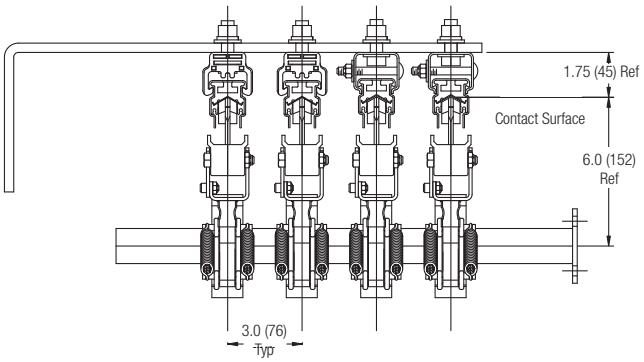

700A - with Insulators

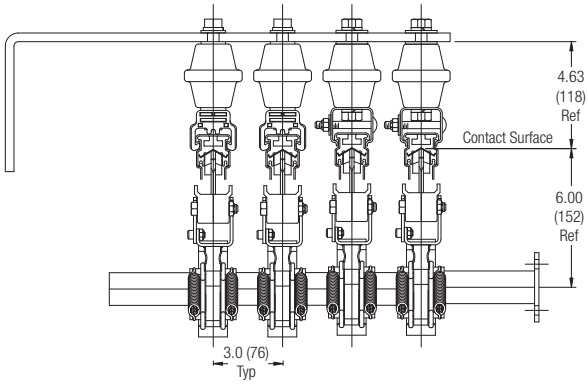

1000A - Standard Hangers

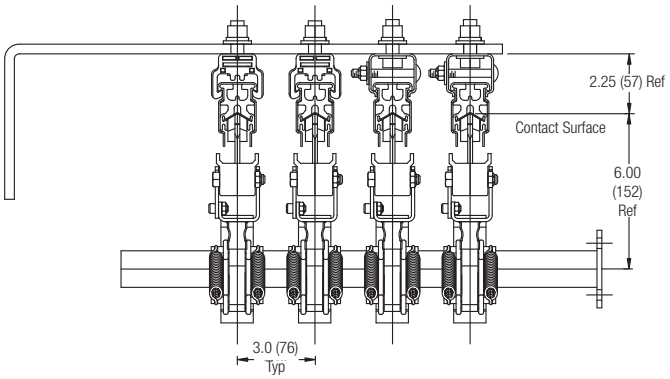

1000A - with Insulators

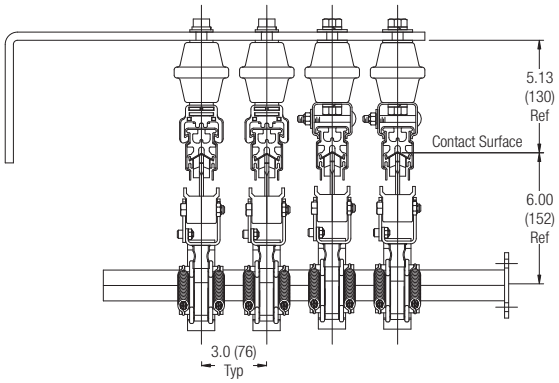

1500A - Standard Hangers

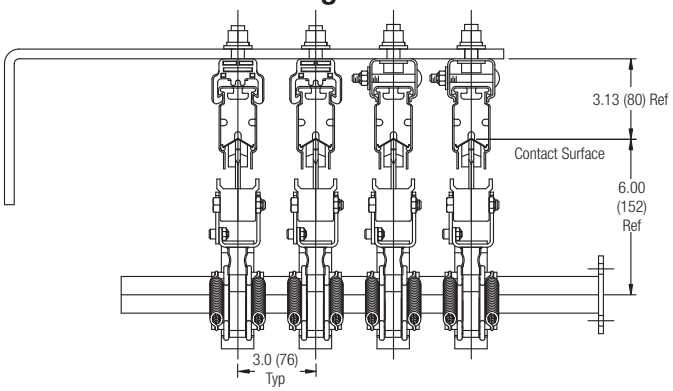

1500A - with Insulators

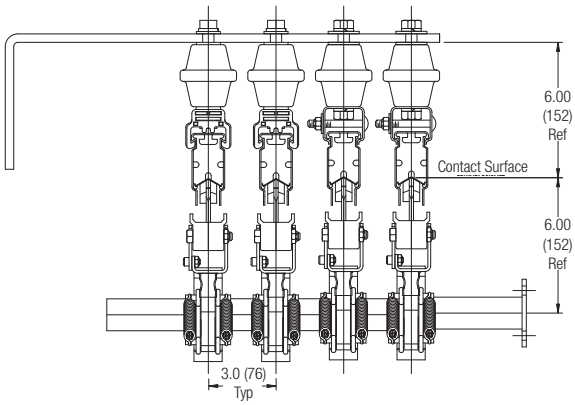

Hevi-Bar II Bar & Expansion Dimensions

Ace Crane
800-562-9840
sales@acecrane.com

Bar Profiles

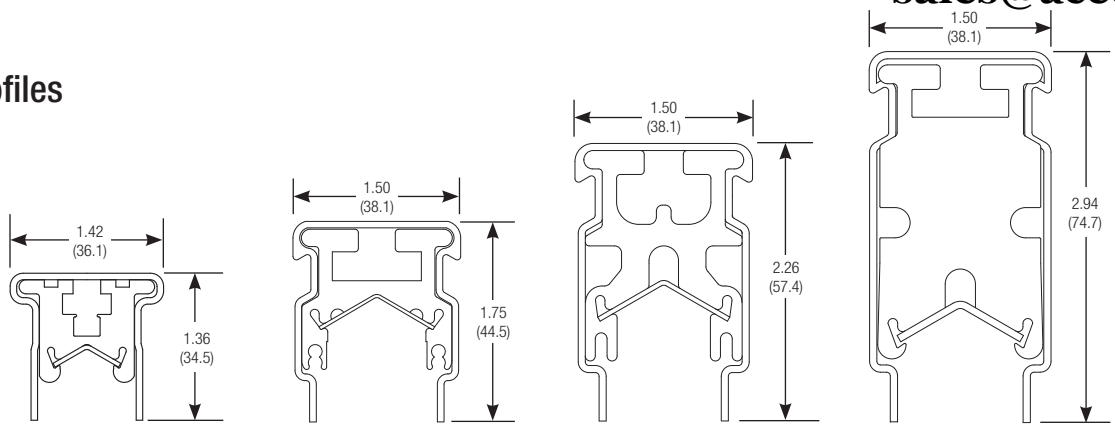

500A 700A 1000A 1500A

500A Expansion Section (37677 and 39741-J)

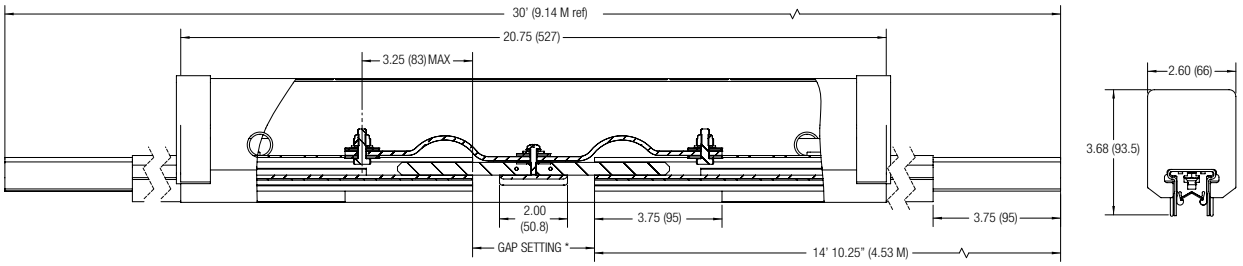

700A Expansion Section (24566 and 50739)

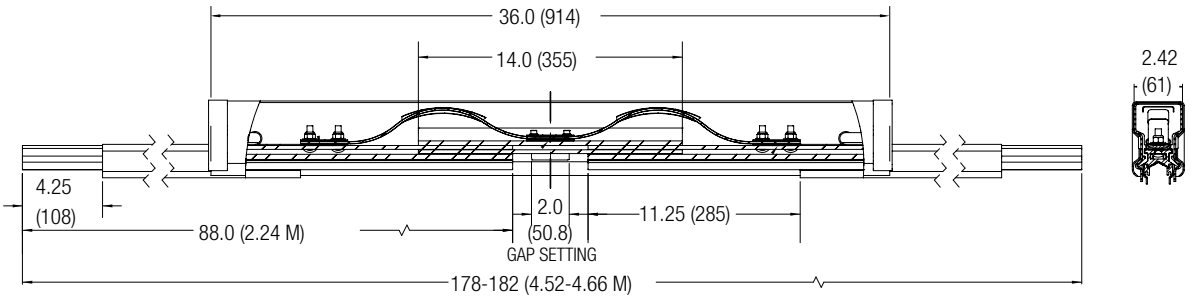

1000A Expansion Section (23512)

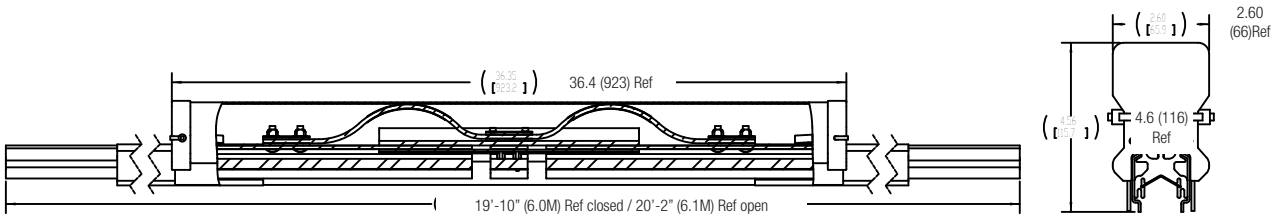

1500A Expansion Section (32820)

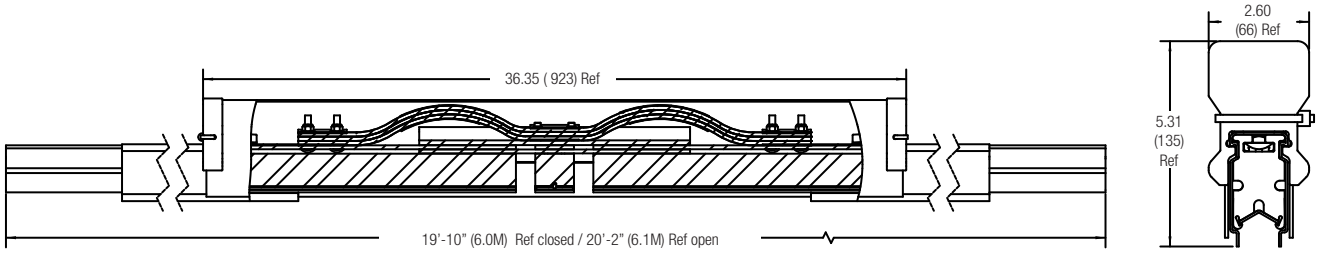

Hevi-Bar II Splice Dimensions

Ace Crane
800-562-9840
sales@acecrane.com

500A Splice (37676), 1/4” Bolts, Torque to 6 - 8 ft-lb

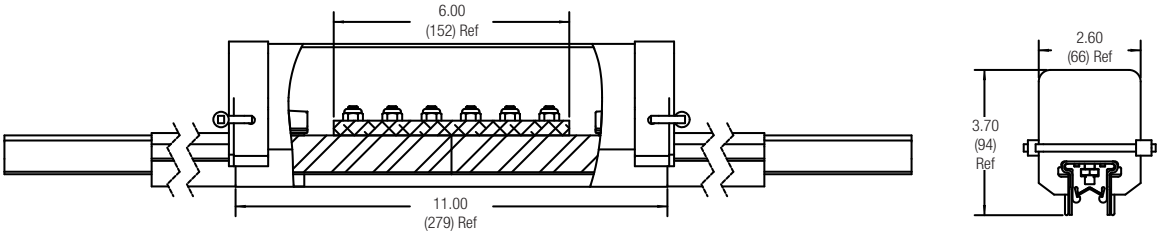

700A Splice (38115), 5/16” Bolts, Torque to 10 - 11 ft-lb

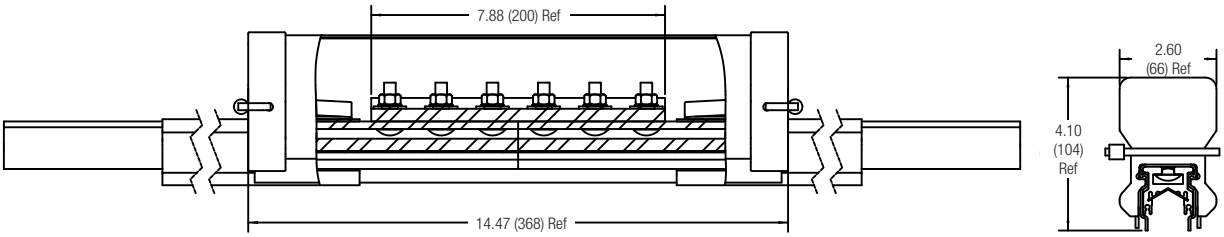

1000A Splice (37746), 5/16” Bolts, Torque to 10 - 11 ft-lb

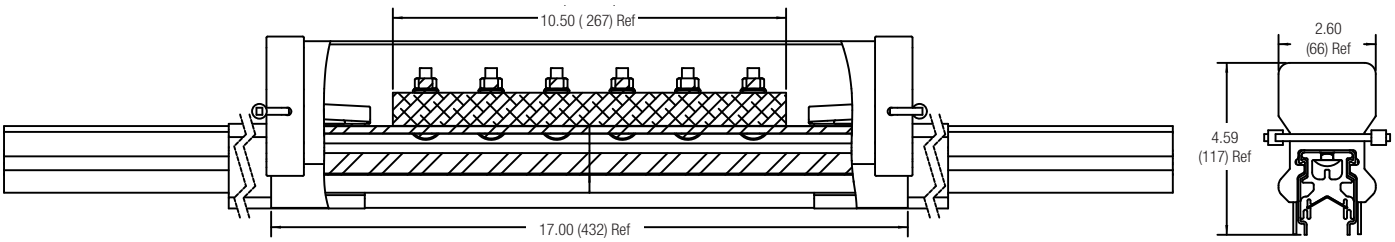

1500A Splice (38968), 5/16”, Torque to 10 - 11 ft-lb

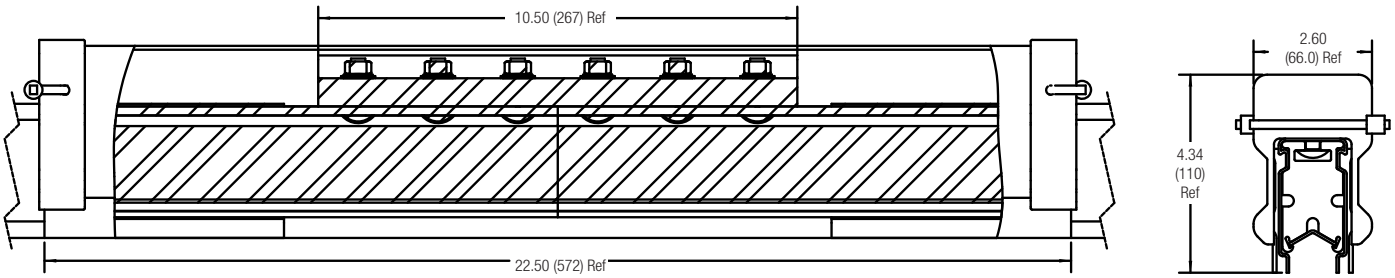

Hevi-Bar II Power Feed Dimensions

Ace Crane
800-562-9840
sales@acecrane.com

500A Power Feed (37674), 1/4” Bolts on 1” Centers, 6 -8 ft-lb

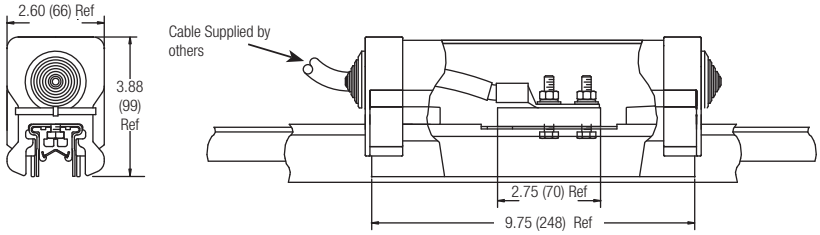

700A Power Feed (38117), 5/16” Bolts on 1” Centers, 10 - 11 ft-lb

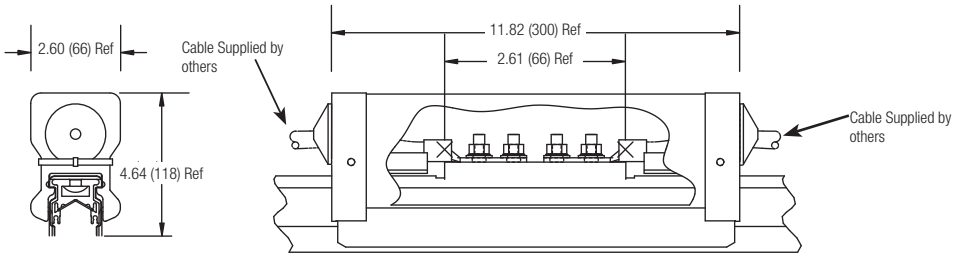

1000A Power Feed (38184), 5/16” Bolts on 1” Centers, 10 - 11 ft-lb

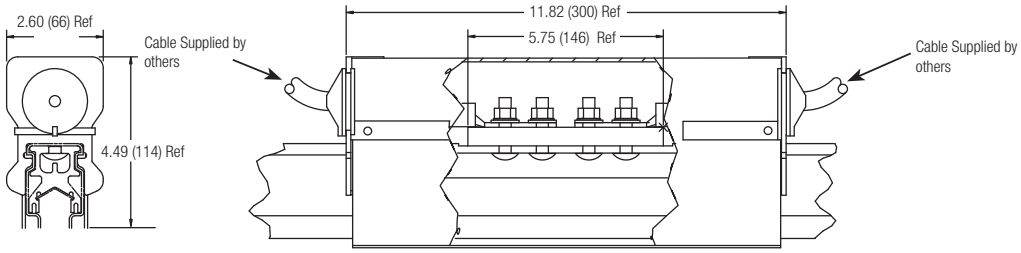

1500A Power Feed (50227), 5/16” Bolts on 1” Centers, 10 - 11 ft-lb

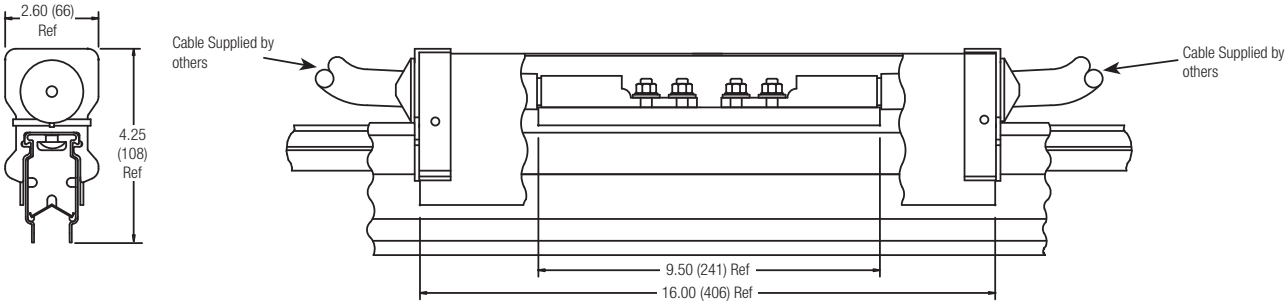

Hevi-Bar II Power Interrupting Section Dimensions

500A Power Interrupting Section (50746)

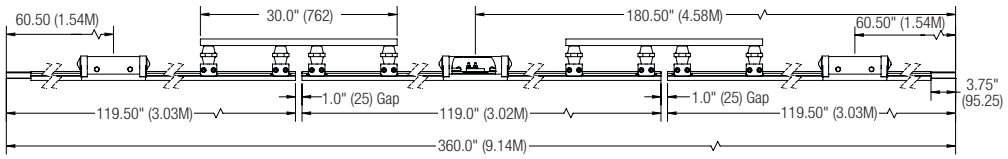

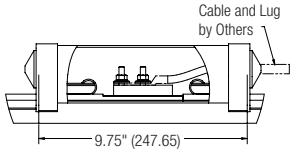

700A Power Interrupt (50748)

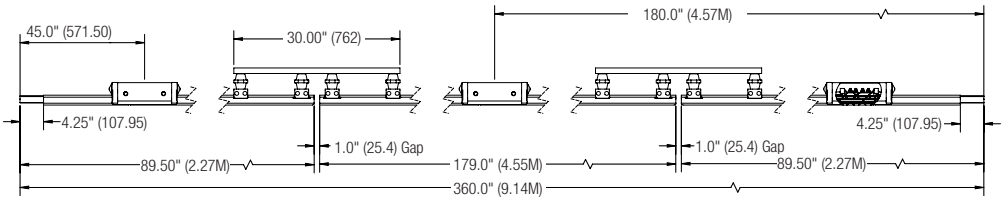

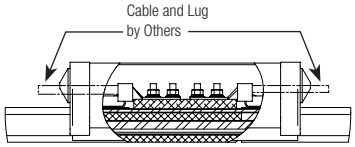

1000A Power Interrupt (50755)

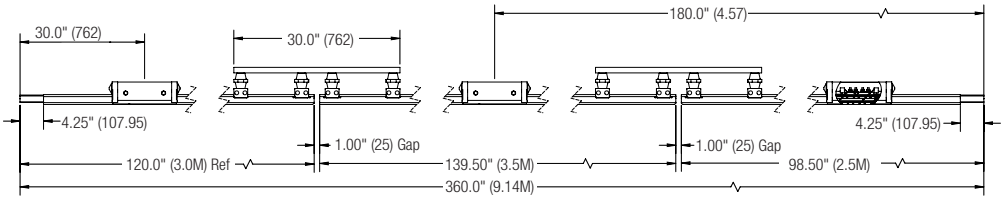

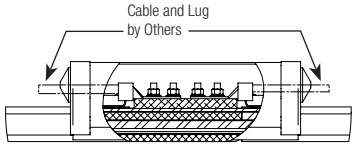

1500A Power Interrupt (50760)

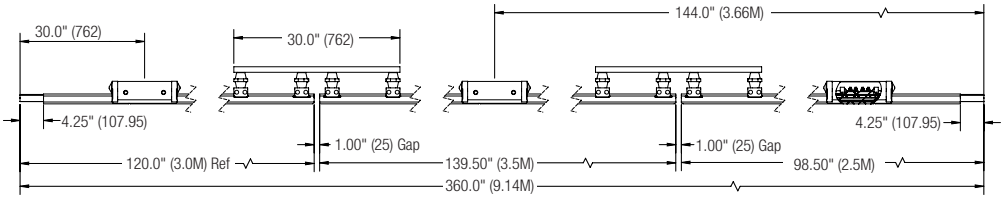

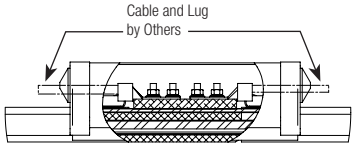

Hevi-Bar II End Cover Dimensions

Ace Crane
800-562-9840
sales@acecrane.com

500A End Cover (27588)

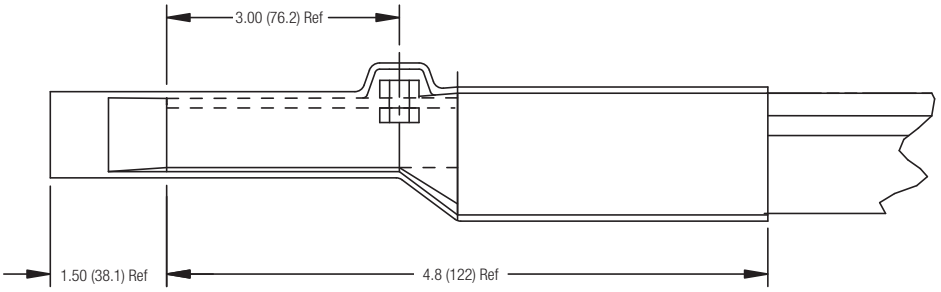

700A End Cover (50859)

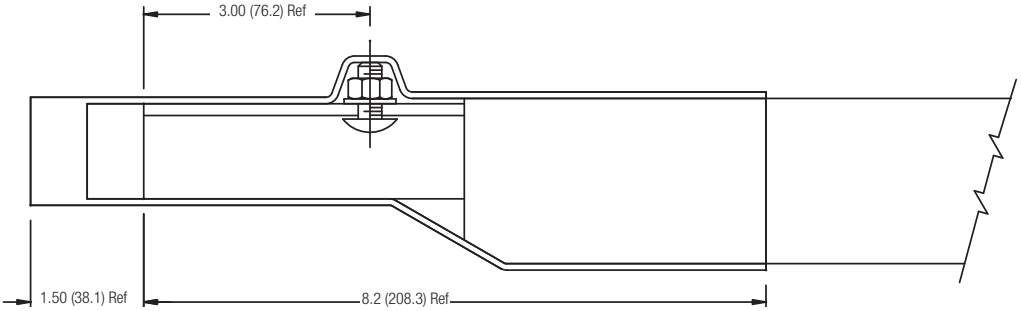

1000A End Cover (33796B)

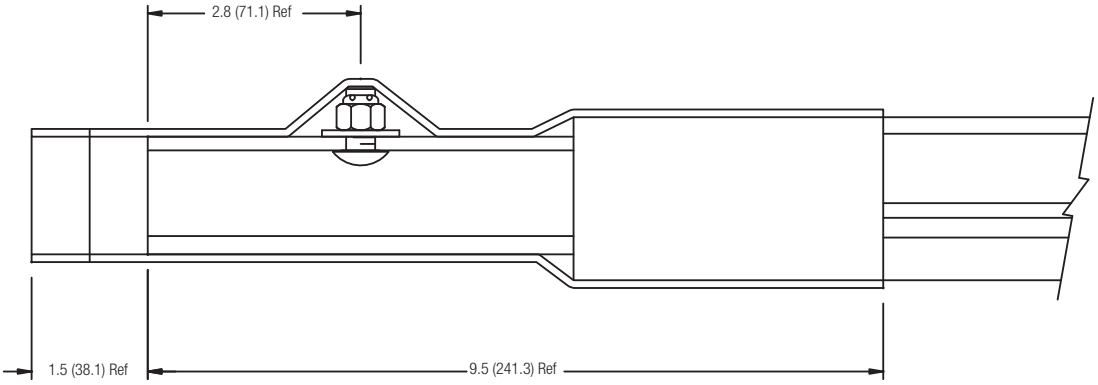

1500A End Cover (33796B)

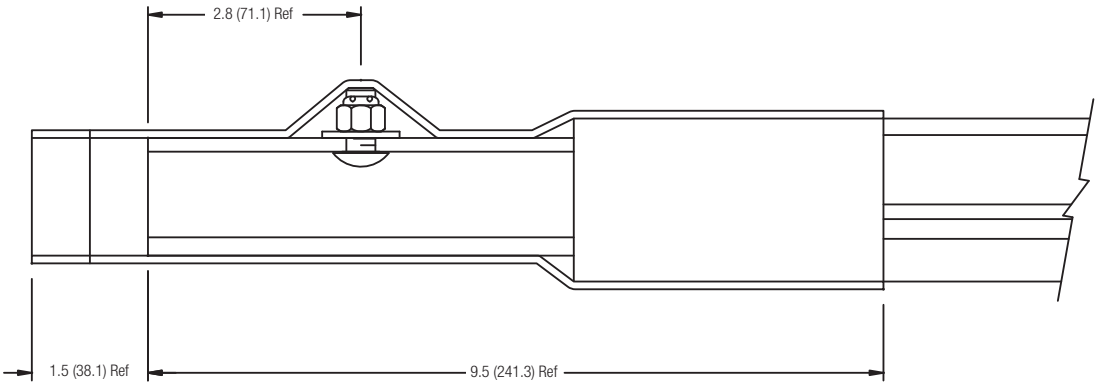

Hevi-Bar II Collector Dimensions

Ace Crane
800-562-9840
sales@acecrane.com

125A Single Collector ✱ (30388/50205)

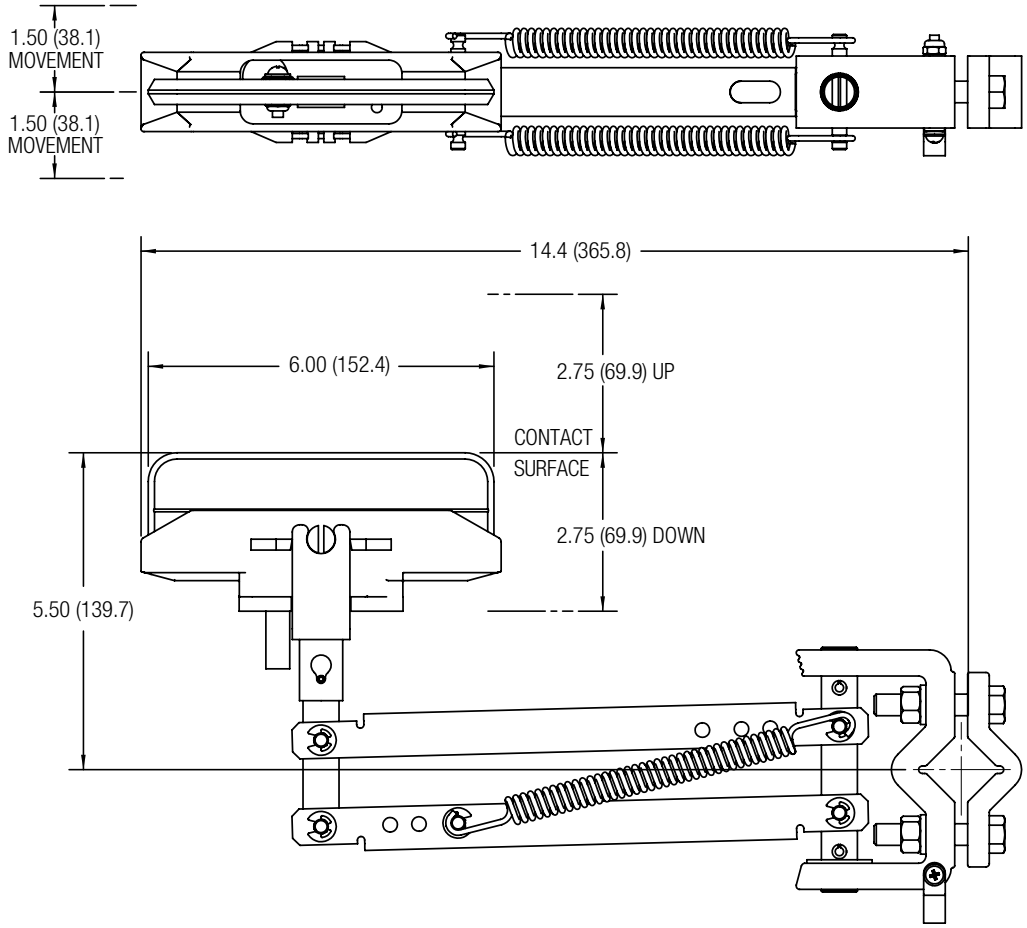

250A Tandem Collector ✱ (30389/39752)

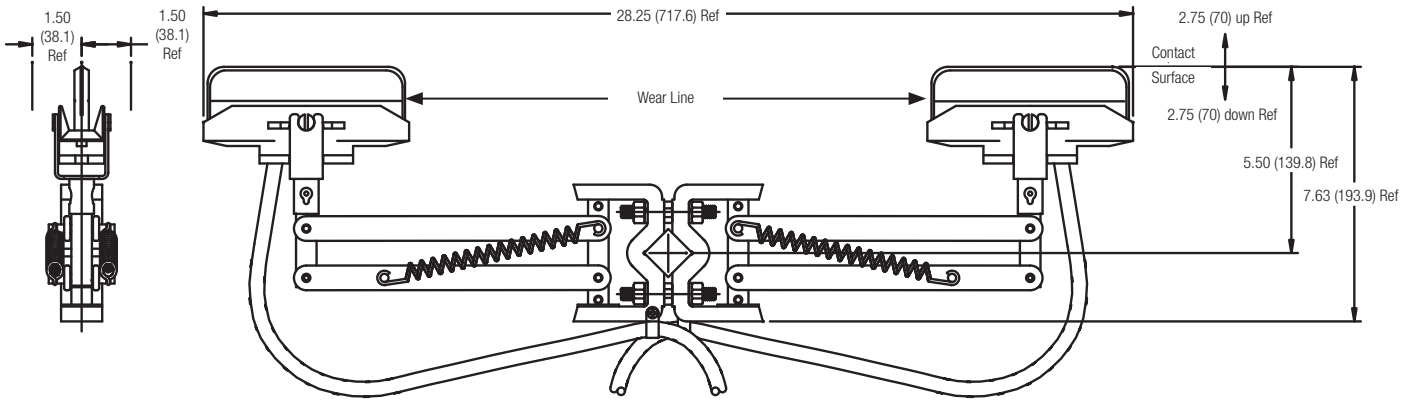

✱ Only for use with 500A Conductor Bar

Hevi-Bar II Collector Dimensions

Ace Crane
800-562-9840
sales@acecrane.com

200A & 300A Single Collector (24060 / 51522 / 24060Q)

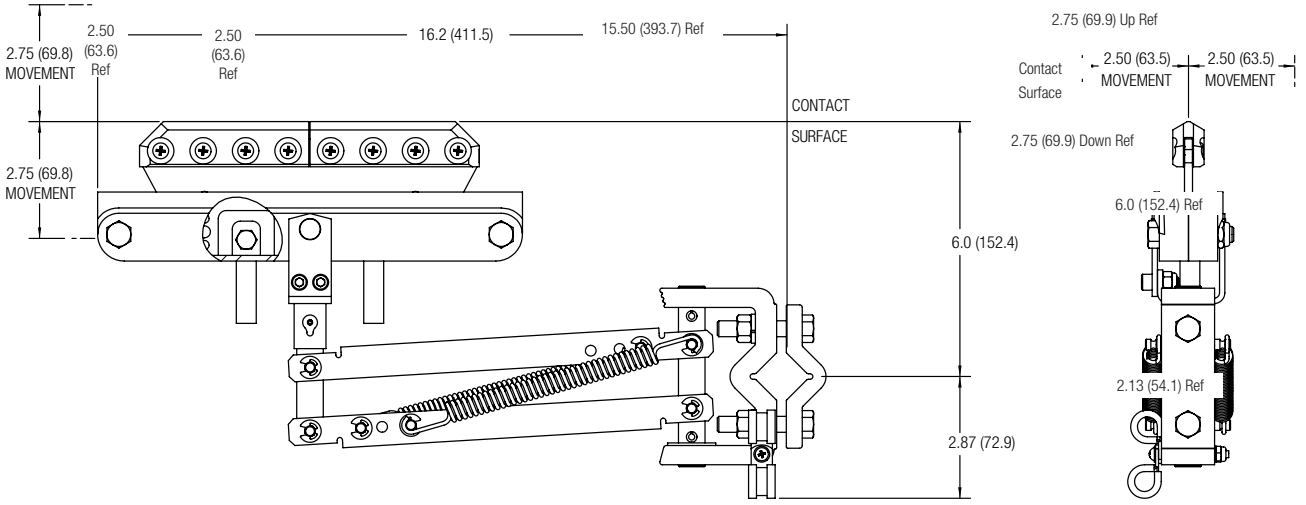

400A & 600A Tandem Collector (24061 / 39848 / 24061B)

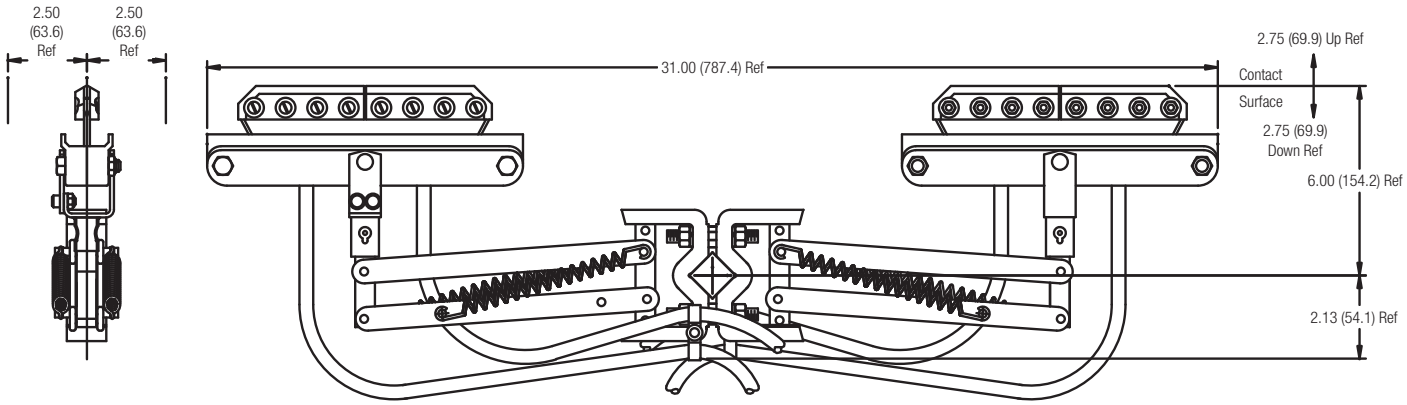

✱ Only for use with 700A, 1000A & 1500A Conductor Bar

Appendix I - Selection of Systems

Ace Crane
800-562-9840
sales@acecrane.com

Carefully review your equipment and application to chose the correct system and reduce the risk of system failures, equipment downtime, and maintenance time and expense. There are eight interrelated factors that should be considered when selecting the correct system.

Environmental Conditions

Have all aspects of the operating environment been accounted for?

- **Freezing Conditions** - Might require a **heater wire** to keep the conductor contact surface free from ice.
- **Water and/or Dust** - Might adversely affect components and might require the use of insulated hangers to better isolate the "live" conductors from ground.
- **Chemicals** – Can adversely affect system components. Acidic or basic fumes may require stainless steel hardware and components. With the Hevi-Bar II system, you may want to consider the optional "**Dura-Coat**" treatment to reduce component corrosion (Pgs. 37, 39, 41, 44).
- **Cutting Oils** – May negatively affect polycarbonate components
- **Radiation** - May require the use of non-PVC components and non-galvanized plated components.

Mounting and Installation

How will your system be mounted?

- **Bottom Entry** – Puts the running surface on the bottom side of the conductor, which keeps dust, water, or debris away.
- **Lateral (or side) Entry** – Can be used if space is limited. Lateral mounting is not recommended for dusty, outdoor, or wet conditions. You may be able to stagger the collectors to decrease the space required for the system.
- **Installation** – Collector Arms are designed to accommodate a certain amount of movement or misalignments between the crane/vehicle and the conductor. However, if misalignments are excessive the collector could disengage from the bar. **Poor collector installation is the single greatest cause of new system problems.** Installation Instructions should be strictly followed to optimize system performance and prevent problems. Manuals are available at www.conductix.us.

Number of Power and Bonding Conductors Required

Have you ordered enough conductor runs?

- **Power Legs** - Each "power leg" requires one run of bar
- **Bonding (Ground) Bar** - Per article 610.61 (National Electrical Code): "The trolley frame and bridge frame shall not be considered as electrically grounded through the bridge and trolley wheels and its respective tracks. A separate bonding conductor shall be provided". A bonding bar is required for all overhead cranes built after 2004.

Moving Versus Stationary Applications

Is the equipment moving or stationary when operating?

- **Moving Machine** - Draws maximum power as it moves. Current-induced heat is dissipated over a wider area of the conductor.
- **Stationary Machine** - Draws maximum power while stationary for extended periods (e.g.: weld stations, testing equipment, or cranes that repeatedly lift in the same location). Current-induced heat is not easily dissipated when collectors are stationary. In these cases, verify that the collectors and conductors are adequate for the application.

Current and Voltage Requirements

The purchase of a new conductor system affords the opportunity to size the system for additional cranes or larger cranes that may be added in the future. *A small investment now could avoid major investments in the future.*

- **Conductor Bar Rating** – Per NEC Article 610-14, the bar must accommodate 100% of the current of all the largest motors involved in a single movement, plus 50% of the next largest motors. The auxiliary hoist motor must be included if it works in conjunction with the main hoist. The system also must accommodate 100% the current draw of auxiliary equipment such as magnets, lighting, air conditioners, etc. that operate when the largest motors are energized.
- **Multiple Cranes on a Single Runway** – Sum the amperage requirements of each crane, then apply the appropriate *"diversity factor"* (NEC Table 610-14e). All cranes do not pull the maximum load all the time or pull the load at the same time.
- **Two Cranes Working in Tandem** - Do not apply the diversity factor, since both run at the same time. See Specification Data Sheet, Pg. 6-7 for further "total load" calculation details.

Appendix I - Selection of Systems

- **Voltage Rating** - 600 volt rated insulators are standard. Higher voltages require insulators designed for that voltage. Conductor separation may also be affected for medium voltage (e.g. 4160 volts) and higher. The conductor system may need to meet the fault force requirements as determined by a qualified engineer.

Voltage Drop and Power Feed Locations

Voltage drop along a conductor increases as system length increases and as ambient temperature increases.

- **Maximum Voltage Drop** - The CMAA (Crane Manufacturers Association of America) recommends a maximum volt age drop of 3% on runways and 2% on bridges. The voltage drop in volts will vary according to voltage available. For example, a 3% voltage drop on a 480 volt system is 14.40 volts; a 3% voltage drop at 115 volts is 3.45 volts.
- **Center Power Feed** - Is the optimal location for most systems. Longer runs may require multiple power feed locations to compensate for voltage drop and to minimize the total cost of the system.
- **Multiple Power Feeds** - Can reduce total system cost if the savings of a lower capacity bar offset the cost to install the multiple power feed locations.
- **Calculating Voltage Drop** - Use Conductix-Wampfler Quick Quote (see Pg. 5) to automate this calculation, as shown in the examples below. Voltage drop can also be manually calculated – see Appendix II, Pg. 61.

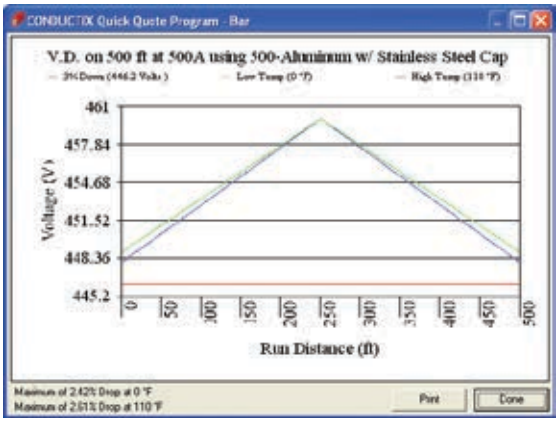

Figure 1 – Center Feed Example: Voltage drop along a 500 foot long runway with one crane drawing 500 amps at 460 volts on a 500 amp rated bar. The green line shows the voltage drop along the run at 0^0 F. The blue line shows the voltage drop at 110^0 F. The red line indicates the 3% maximum voltage drop. The voltage drop increases linearly as you move away from the center feed point.

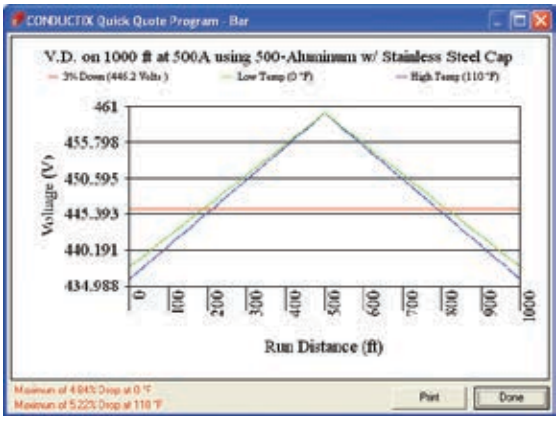

Figure 2: - Same parameters as Fig. 1, except with a 1000 foot system. Note that the voltage drop is now greater than the recommended 3%.

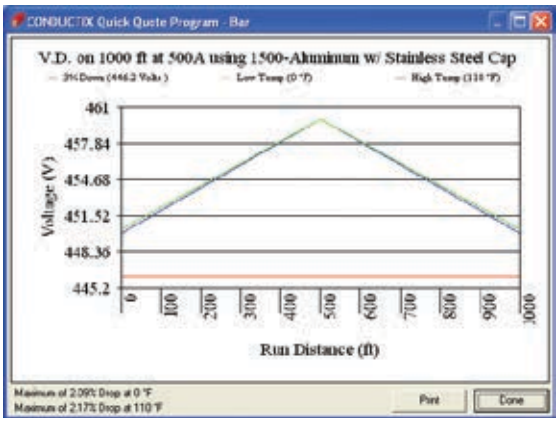

Figure 3: Center Power Example: With higher capacity 1500 amp bar to lower the voltage drop below 3%.

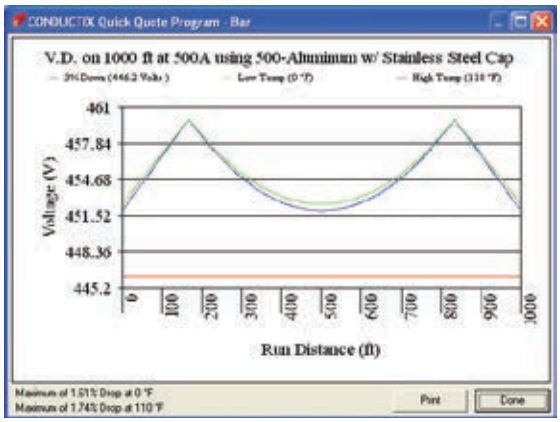

Figure 4: Two power feeds optimally located. The voltage drop remains under 3% , without the need to increase conductor capacity. A load positioned between the two feed points is supplied by both power feeds.

Appendix I - Selection of Systems

Thermal Expansion/Contraction and Other Effects of Heat

The effects of thermal expansion and contraction become more pronounced as the length of the run increases. The combination of ambient heat plus current-induced heat affects the size of conductor bar needed, the power feed arrangement, and the type of insulating cover required.

- **"Snaking"** – Occurs when the conductors heat up, and due to cumulative hanger friction, start to bow to the side. This can be observed by sighting down the runway. Each bar will bow alternately left and right between hangers, which puts strain on the collectors and hangers. Eventually, the collectors can disengage and damage the system.
- **"Snaking" - Older Systems -** May begin after a year or two in operation. This is because accumulated dirt increases friction between bar and hangers. This possibility should be considered when determining the number of expansions. Precautions taken at the time of installation could avoid costly repairs later.
- **Shorter Systems** - Can be anchored in the center. As the temperature of the conductor rises, the expansion simply pushes the bar outward. The longest system that can be successfully "center-anchored" depends on the friction of the hangers and the rigidity of the conductor.
- **Longer Systems** - Require the installation of one or more **"Expansion Sections"** - i.e: lengths of conductors designed to slide in and out to absorb bar expansion/contraction between anchor points. The slider is bridged by a jumper cable to maintain electrical continuity and acts as the running surface for the collector. Expansion sections effectively break the run into smaller lengths defined by the anchor points. The length of run an expansion section can accommodate is based on expansion/contraction parameters, including temperature range, conductor material, and the length of the slider. The **high end** of the temperature range is the sum of current-induced heat of the bar (at maximum load) plus the highest ambient temperature. The **low end** is the lowest ambient temperature, which may occur during a January system shutdown. Conductor sections need to be anchored properly between each expansion and between the last expansion and the end of the run.
- **Ambient Heat** – All heat sources must be considered and evaluated for their effect on the conductor and cover. Typical heat sources are furnaces, billets, slag, etc. Ambient heat is easy to measure and the effects are consistent with measured values.
- **Radiant Heat** - Can be difficult to measure and its effects hard to anticipate. It will directly affect cover, and the cover might withstand it. However, the effect on metal components might be even more pronounced. For example, metal hangers may heat to such a degree that they will melt the cover. Heat shields provide a good way of minimizing the effects of radiant heat. If heat shields are not practical, higher temperature rated covers might be required.
- **Total Operating Temperature** – The sum of the ambient temperature, radiant heat, and current-induced temperature rise. This is the total heat the conductor and its cover material must withstand. For example, if your machine is working in an ambient temperature of 120^0 F (49^0 C), and the current-induced temperature rise of the conductor adds another 50^0 F, the total 170^0 F (76.7^0 C) exceeds the PVC cover rating of 70^0 C (156^0 F). The cover will deform or melt, and interfere with collector tracking and/or interrupt power. In this scenario, the cover must be made from a heat-resistant material. Conductix-Wampfler offers "Medium Heat" or "High Heat" covers for most systems – see Pg. 4.

Conductor Bar Current Rating and Duty Cycle

- **Conductor Electrical Capacity** – A wide variety of capacities are offered, since conductors often power multiple vehicles. Ratings are based on the electrical load the conductor can handle before the operating temperature of the bar exceeds the temperature rating of its cover. The rating assumes a certain ambient temperature (e.g.: 49^0 C or 120^0 F) and a specific duty cycle.
- **Duty Cycle** - One manufacturer may rate their conductors for continuous duty; others for intermittent duty based on a given duty cycle. It is important to know which was used to establish the ratings.
- **Continuous Duty** - A conductor is put under a continuous load at some "normal" ambient, usually 30^0 C. Once the bar temperature has stabilized at the target load rating, the bar temperature cannot exceed the temperature rating of the cover. Most PVC covers can handle approximately 70^0 C, which is a 40^0 C rise over 30^0 C ambient.

Appendix I - Selection of Systems

- **Intermittent Duty** - Assumes that the current is "on" for a period of time and "off" for a period of time; i.e.: one "duty cycle". The conductor is allowed to cool between "on" phases. A 50% duty cycle is most common – i.e.: one minute on and one minute off. Since a crane cannot lift continuously, nor is current flowing at maximum for long periods of time, most operate at a 40% duty cycle or less. So a 50% duty cycle is sufficient. However, cranes that see heavy duty, especially Class D and E cranes (see end of this Appendix), may push the conductor beyond a 50% intermittent duty rating.
- **Collector Electrical Capacity** – A limited selection of collector capacities is available, since collectors only power the crane/vehicle they service. Additional collectors can be used if the crane/vehicle load exceeds the collector rating. Note that the load will not be shared equally among multiple collectors. The collector closest to the power feed will carry a larger load than those farther down the line. So when using multiple sets of collectors, make sure the collector capacities are adequate for this scenario

CMAA Crane Classifications

Provided for general information only. Refer to CMAA Section 78-6 for full definitions.

Class A (Standby or Infrequent Service) Performs precise lifts at slow speed, with long idle period between lifts. Performs lifts at full or near rated capacity. Power houses, public utilities, turbine rooms.

Class B (Light Service) Light service requirements at slow speed. Performs 2 to 5 lifts/hour, light to occasional full loads, at 10 ft. average height. Repair shops, light assembly, service buildings, light warehousing.

Class C (Moderate Service) Moderate service requirement with loads averaging 50% of capacity. 5 to 10 lifts per hour at 15 ft. average lift height. Not more that 50% of lifts at rated capacity. Machine shops, paper mill machine rooms, etc.

Class D (Heavy Service) Bucket/magnet duty, where heavy duty production is required. Loads of 50% capacity handled constantly. 10 to 20 lifts per hour averaging 15 ft. lift height. Not over 65% of the lifts at rated capacity. Heavy machine shops, foundries, fabricating plants, steel warehouses, container yards, lumber mills, etc.

Class E (Severe Service) Loads approaching capacity throughout the life of the crane. 20 or more lifts per hour at or near rated capacity. Magnet/bucket cranes for scrap yards, cement mills, lumber mills, fertilizer plants, container handling.

Class F (Continuous Severe Service) Handles loads approaching capacity continuously under severe service conditions throughout the life of the crane. Includes custom designed specialty cranes performing work critical to the total production facility. Needs to have the highest reliability and ease of maintenance.

For system recommendations based on Crane Class, contact Conductix-Wampfler Sales.

Appendix II - Voltage Drop Calculations

Proper selection of conductor and covers for Conductix-Wampfler conductor systems is simple, requiring only the ampacity, voltage and ambient conditions.

The method for determining the rating for cranes and hoists is completely outlined in NEC 640-14(e). Further reference to the Code is made where applicable.

I. For a single crane, simply use the nameplate full load ampere rating of the largest motor or group of motors for any one function plus half the rating of the next largest motor or motor groups.

Hoist = 65A x 1 = 65.0
Bridge = 27A x .5 = 13.5
Total 78.5A

For multiple cranes, use the same method for each crane, add the results and multiply by the demand factor shown in table 610-14(e) NEC Book. Examples with data taken from motor nameplates - all are 460V, 3-phase, 60 Hz.

Crane #1
Hoist = 65A x 1 = 65.0
Bridge = 27A x .5 = 13.5
Total 78.5A

Crane #2
Hoist = 52A x 1 = 52.0
Bridge = 14A x .5 = 7.0
Total 59.0A

Total of #1 + #2 137.5 x .195 = 130.0A

II. When the motor ampere ratings are unknown, a good approximation may be made using the nominal horse power ratings of the motors, converting them to full load amperes per NEC table 430-150; then proceeding as above. If the motors are not three-phase, applicable tables 430-137 through 430-149 must be used.

A few examples from the tables are:

Full-Load Current (Three-Phase Alternating-Current Motors)

HP	230V	460V	575V
10	28	14	11
15	42	21	17
20	54	27	22
25	68	34	27
30	80	40	32
40	104	52	41
50	130	65	52
60	154	77	62
75	192	96	77
100	248	124	99
125	312	156	125
150	360	180	144
200	480	240	192

Full-Load Current in Amperes, Direct-Current Motors Armature Voltage Rating (Direct-Current)

HP	240V	HP	240V
10	38	60	206
15	55	75	255
20	72		
25	89		
		100	341
30	106	125	425
40	140	150	506
50	173	200	675

Voltage Drop

Voltage drop is the difference between the voltage at the feed point and the voltage at the extreme end. It is usually expressed as a percentage of the supply voltage and can be calculated as shown below.

Voltage drop increases in direct proportion to the length of the conductors. The CMAA specifications limit total voltage drops to 3% on runways and 2% on bridge conductors. Since power feeds are usually located at the mid-point of a system, the effective length is the distance from power feed to the end of the runway. On longer systems it may be necessary to provide additional feed points.

Voltage Drop per 100 Ft. of Run Per 100A of Current

Conductor	3-Phase 60 Hz	D.C.	Example
Stainless Steel 40A	35.2	44.6	
Galvanized Steel 90A	16.2	15.0	
Galvanized Steel 110A	10.1	7.1	Rolled Copper 3-phase 350' long, 250A load.
Stainless Clad Copper 250A	2.01	2.0	VD = 1.39 x 3.5 x 2.5 = 12.1 volts
Copper Steel Laminate 250A	2.01	2.0	Assume load pF is 90
Rolled Copper 350A	1.39	1.2	
Solid Copper 500A	1.08	0.8	

3% at Max Amps and Length from Power feed			
Bar	Amps	480V	240V
SS	40	102'	51'
Galv	90	99'	49'
Galv	110	130'	65'
SS / CU	250	287'	144'
CU / Galv	250	287'	144'
Rolled Cu	350	296'	148'
Solid Cu	500	381'	191'

3% of 480V = 14.4
2% of 240V = 7.2
2% of 180V = 9.6
2% of 240V = 4.8

Appendix III Electrical Formulas & Conversions

Electrical Formulas

Ohms Law

Ohms = $\frac{\text{volts}}{\text{amperes}}$ **Amperes** = $\frac{\text{volts}}{\text{ohms}}$ **Volts** = amperes x ohms

Power

Watts = amperes x volts

Amperes = $\frac{\text{watts}}{\text{volts}}$ (not 3-Phase)

HP = $\frac{\text{volts x amps x efficiency}}{746}$

Power Factor = $\frac{\text{watts}}{\text{amperes x volts}}$

3-phase Kilowatts = $\frac{\text{volts x amperes x power factor x 1.732}}{1000}$

3-phase Amperes = $\frac{\text{746 x HP (Horsepower)}}{\text{1.732 x volts x efficiency x power factor}}$

3-phase Volt-Amperes = volts x amperes x 1.732

Single-phase Kilowatts = $\frac{\text{volts x amperes x power factor}}{1000}$

Single-phase Amperes = $\frac{\text{746 x HP (Horsepower)}}{\text{volts x efficiency x power factor}}$

Speed

Synchronous RPM = $\frac{\text{Hertz x 120}}{\text{poles}}$ **Percent Slip** = $\frac{\text{Synchronous RPM - Full Load RPM}}{\text{Synchronous RPM}}$ x 100

Metric Conversion Formulas

To Obtain:	Calculate:
Millimeters	Inches x 25.4
Inches	Millimeters x 0.0394
Meters	Feet x .3048
Feet	Meters x 3.281
Square Centimeters	Square Inches x 6.45
Square Inches	Square Centimeters x 0.155
Kilograms	Pounds x 0.4536
Pounds	Kilograms x 2.205
Kilograms per Meter	lb/ft (divided by) .6719
Pounds per Foot	kg/m x .6719
Degrees Celsius	(Degrees F-32) x 5/9
Degrees Fahrenheit	(Degrees C x 9/5) + 32

Appendix IV - Power Interrupting Sections

You can shut off power in a designated area along a bar system, either to safely maintain vehicles or for some other purpose while leaving the rest of the system powered. The shut-off zone can be configured at the end of your system or in the middle using a "Power Interrupting Section" along with the proper switch arrangement. The diagrams on pages 63-64 illustrate how this is set up. Note that Tandem Collectors can bridge across the "isolation joint" of an isolation section, so enough Power Feeds and Isolation Sections must be used to ensure a safe power-off situation. Conductix-Wampfler offers a safe switching arrangement called **PowerGuard™** shown in catalog CAT1017.

"End" Power Interrupting Sections

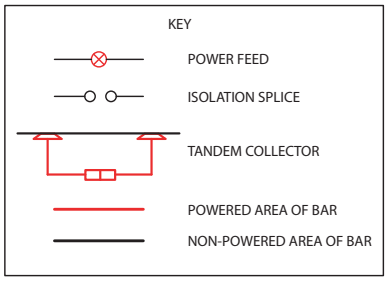

Safe-Lec 2 System: For each power phase order:

- Qty. 1 - "Power Interrupting Section" of the desired current rating (Pg. 21).
  With this "kit" you get the required isolations and power feeds. Safe-Lec 2 interrupts are meant for indoor use only in dry, clean environments.
- Qty. 1 - "Customer supplied" DPST switch per phase and necessary power wiring (ordered from others) - OR Conductix-Wampfler's **PowerGuard**.

Hevi-Bar II System: For each power phase order:

- Qty. 1 - "Power Interrupting Section" of the desired current rating (Pgs. 36-43). With this "kit" you get the required isolations and power feeds. The HB-II power interrupts can be used indoors or out and can withstand dirty/dusty environments common in mills.
- Qty. 1 - "Customer supplied" DPST switch per phase and necessary power wiring (ordered from others)

I: System with power off to the maintenance section (DPST switch open), but with tandem collector bridging the first (left-most) isolation joint.

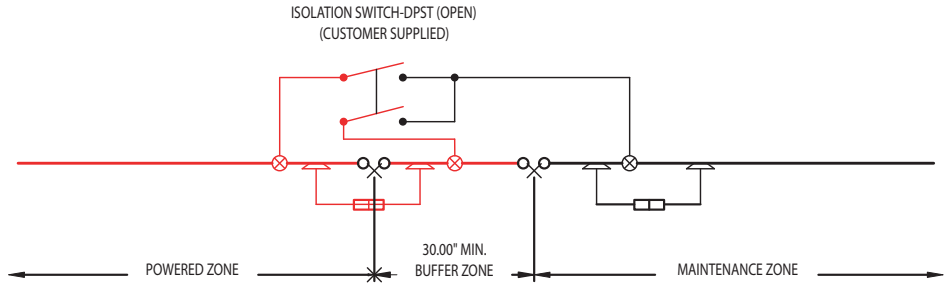

II: System with power off to the maintenance section (DPST switch open), but with tandem collector fully to the right of the first (left-most) isolation joint.

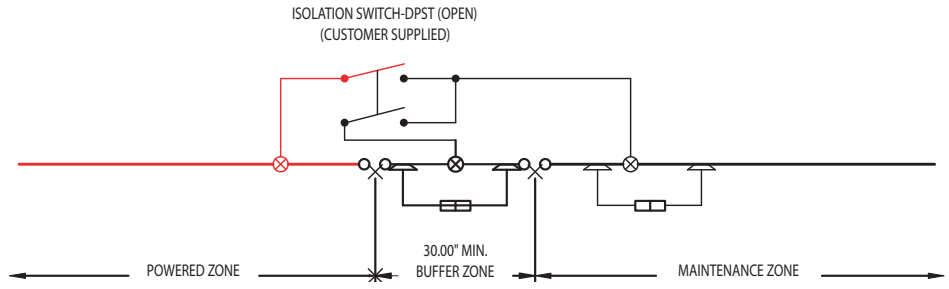

III: System with power on to the maintenance section (DPST switch closed).

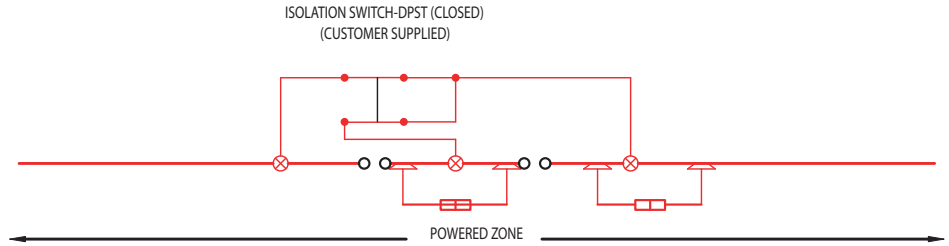

Appendix IV - Power Interrupting Sections

“Middle” Power Interrupting Sections

Safe-Lec 2: For <u>each power phase</u> order:

- Qty. 2 - “Power Interrupting Section” of the desired current rating (Pgs. 21). With this “kit” you get the required isolations and power feeds.
- Qty. 1 - “Customer supplied” DPST switch per phase and necessary power wiring (ordered from others) - OR Conductix-Wampfler's **PowerGuard**.

Hevi-Bar II: For <u>each power phase</u> order:

- Qty. 2 - “Power Interrupting Section” of the desired current rating (Pgs. 36-43). With this “kit” you get the required isolations and power feeds.
- Qty. 1 - “Customer supplied” DPST switch per phase and necessary power wiring (ordered from others) - OR Conductix-Wampfler's **PowerGuard**.

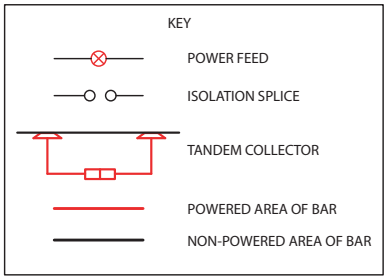

I: System with <u>power off</u> to the maintenance section (DPST switches open), power will not feed into the maintenance zone.

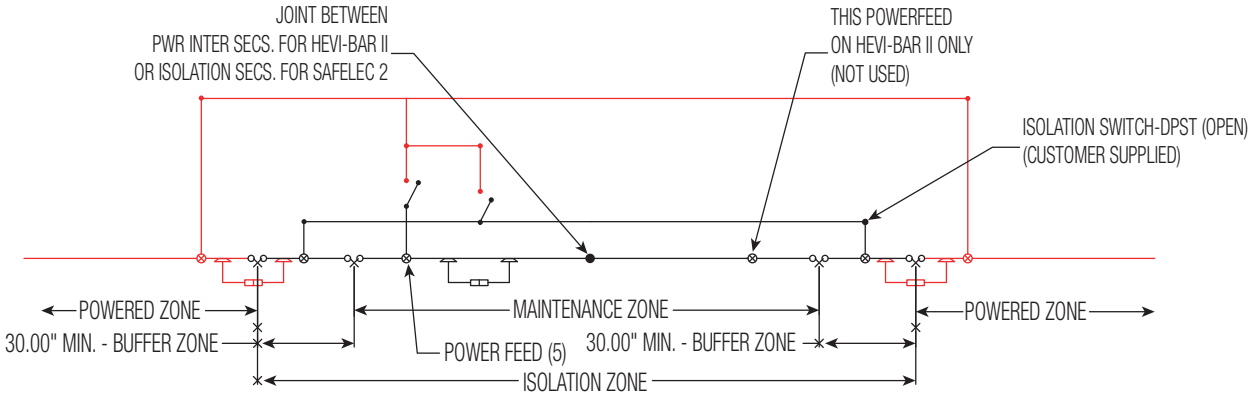

II: System with <u>power on</u> (DPST switches closed), normal crane operation resumes with power to all zones.

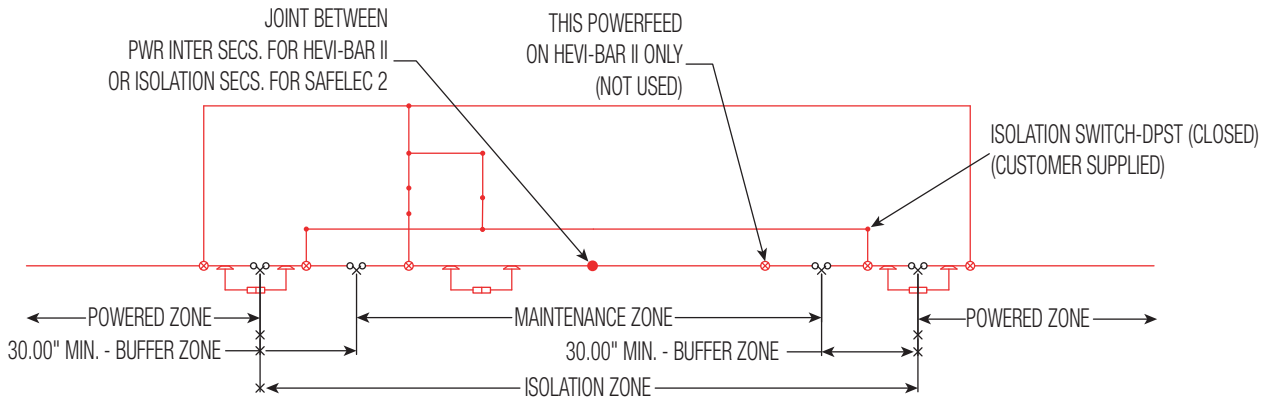

Appendix V Terms, Conditions, and Warranty

The technical data and images which appear in this catalog are for informational purposes only. NO WARRANTIES, EXPRESSED OR IMPLIED, INCLUDING WARRANTIES OF MERCHANTABILITY OR FITNESS FOR A PARTICULAR PURPOSE, ARE CREATED BY THE DESCRIPTIONS AND DEPICTIONS OF THE PRODUCTS SHOWN IN THIS CATALOG. Conductix-Wampfler ("seller") makes no warranty and assumes no liability as to the function of equipment or the operation of systems built according to customer design or of the ability of any of its products to interface, operate or function with any portions of customer systems not provided by Conductix-Wampfler.

Seller agrees to repair or exchange the goods sold hereunder necessitated by reason of defective workmanship, and material discovered and reported to Seller within one year after shipment of such goods to Buyer. Except where the nature of the defect is such that it is appropriate in Seller's judgment to effect repairs on site, the seller's obligation hereunder to remedy defects shall be limited to repairing or replacing (at Seller's option), FOB point of original shipment by Seller, any part returned to Seller at the risk and cost of Buyer. Defective parts replaced by Seller shall become the property of Seller.

Seller shall only be obligated to make such repair or replacement of the goods which have been used by Buyer in service recommended by Seller and altered only as authorized by Seller. Seller is not responsible for defects which arise from improper installation, neglect, or improper use or from normal wear and tear.

Additionally, Seller's obligation shall be limited by the manufacturer's warranty (and shall not be further warranted by Seller) for all parts procured from others according to published data, specifications, or performance information not designed by or for Seller.

Seller further agrees to replace, or at Seller's option to provide a refund of the sales price of any goods that did not conform to applicable specifications or which differ from that agreed to be supplied which non-conformity is discovered and forthwith reported to Seller within thirty (30) days after shipment to Buyer. Seller's obligation to replace or refund the purchase price for non-conforming goods shall arise once Buyer returns such good FOB point of original shipment by Seller at the risk and cost of Buyer. Goods replaced by Seller shall be come property of Seller.

There is no guarantee or warranty as to anything made or sold by Seller, or any service performed, except as to title and freedom from encumbrances, and except as herein expressly stated and particularly without limiting the foregoing. There is no guarantee or warranty, express or implied, of merchantability or of fitness for any particular purpose or against claim of infringement or the like.

Seller makes no warranty (and assumes no liability) as to function of equipment or operation of systems built to Buyer's design or of the ability of any goods to interface, operate or function with any portions of Buyer's system not provided by Seller.

Seller's liability on any claim; whether in contract (including negligence) or otherwise, for any loss or damage arising out of, connected with, or resulting from the manufacture, sale, delivery, resale, repair, replacement or use of any products or, services shall in no case exceed the price paid for the product or services or any part thereof which give rise to the claim. In no event shall Seller be liable for consequential, special, incidental or other damages, nor shall Seller be liable in respect to personal injury or damage to property on the subject matter hereof unless attributable to gross misconduct of Seller, which shall mean an act of omission by Seller demonstrating reckless disregard of the foreseeable consequences thereof.

Seller is not responsible for incorrect choice of models or where products are used in excess of their rated and recommended capacities and design functions or under abnormal conditions. Seller assumes no liability for loss of time, damage or injuries to property or persons resulting from the use of Seller's products. Buyer shall hold Seller harmless from all liability, claims, suits and expenses in connection with loss or damage resulting from operation of products or utilization of services, respectively, of Seller and shall defend any suit or action which might arise there from Buyer's name, provided that Seller shall have the right to elect to defend any such suit or action for the account of Buyer. The foregoing shall be the exclusive remedies of the buyer and all persons and entitles claiming through the Buyer.

CONDUCTIX wampfler
DELACHAUX GROUP

Other Conductor Rail Products

Conductor rails made in the Weil am Rhein, Germany Conductix-Wampfler plant are an ideal choice for the transmission of digital data and power up to 2000 amps and beyond. Special metal rails are used for the accurate transmission of data. Conductix-Wampfler's innovative electronic Powertrans is an extremely efficient system that permits reliable data transmission even under difficult operation conditions.

Conductix-Wampfler rails are available in any number of poles in any desired length and are designed for ease of installation. The rails feature robust construction suitable for harsh industrial environments. Heavy-duty collector assemblies guarantee reliable transmission without interruption for trouble-free operation.

Current collectors move along three axes to compensate for variations in assembly tolerances and inevitable travel variations during operation. This permits uninterrupted transmission of energy and digital data and keeps wear to a minimum. Conductor rails are available for travel speeds up to 33 feet per second.

The experienced engineering and sales people at Conductix-Wampfler are experts in the application of conductor rails to all kinds of industrial applications

For more information on these rail set, please contact Conductix-Wampfler.

All Conductix-Wampfler plants in the United States, Germany, France, and Italy are ISO 9001:2000 certified. Our stringent quality systems assure that you will get the right product every time. See Pg. 67 for a sampling of our other quality products.

In 2007, with the merger of Conductix and Wampfler, the company is now the world leader in the design and manufacture of high performance energy and data transmission products for industrial applications.

811 Series

Available from 10 to 100 amps for automated storage and retrieval systems, monorails, cranes, and specials machines. Straight or curved tracks.

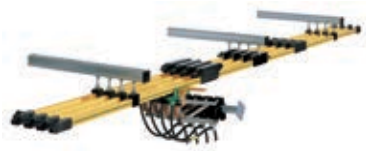

812 Series

Available from 25 to 400 amps. Ideal for mid-sized cranes, people movers, amusement rides, and special machines. Stainless steel running surface for straight or curved track.

813 Series

Available from 500 to 1250 amps Works well for heavy cranes, people movers, and special machines. Patented stainless steel running surface for straight or curved tracks.

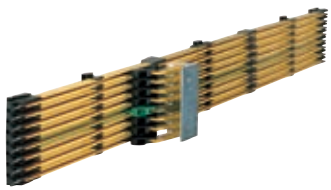

815 Series

Available from 32 to 100 amps. A compact multi-conductor system for electrified overhead monorails and slip rings. Either .47 inch (12mm) or .55 inch (14mm) spacing. Straight or curved tracks.

831 Series

Handles from 10 to 125 amps, in 3, 4, or 5 pole configuration. Great for cranes, automated storage and retrieval systems, and special machines. Straight tracks.

842 Series

Accommodates from 35 to 140 amps in a continuous conductor strip and enclosed "box track" system. 5 or 7 poles. For cranes, ASRS systems, and work stations.

Other Products from Conductix-Wampfler

The products described in the this catalog represent a few of the products from the broad spectrum of Conductix-Wampfler components and systems for the transfer of energy, data, gases, and fluids. The solutions we deliver for your applications are based on your specific requirements. In many cases, a combination of several different Conductix-Wampfler products are needed to fill the application. You can count on all of Conductix-Wampfler's business units for hands-on engineering support - coupled with the perfect solution to meet your energy management and control needs.

Motor driven cable reels

Motor driven reels by Conductix-Wampfler are the perfect solution for managing long lengths of heavy cable and hoses in very demanding industrial applications. Monospiral, level wind, and random wind spools.

Slip ring assemblies

Whenever powered machinery needs to rotate 360^0, field proven slip ring assemblies by Conductix-Wampfler can flawlessly transfer energy and data. Here, everything revolves around flexibility and reliability.

Conductor bar

Whether they are enclosed conductor rails, expandable single-pole bar systems, or high amperage bar for demanding steel miil use up to 6000 amps. Conductix-Wampfler's conductor bar is the proven solution to reliably move people and material.

Spring driven cable reels

We have 60 years experience and trusted brands such as Insul-8, Wampfler, and IER. We offer small cord reels all the way to large multi-motor units, a wide range of accessories, and hazardous location reels.

Cable Festoon systems

It's hard to imagine Conductix-Wampfler cable trolleys not being used in virtually every industrial application. They are reliable and robust and available in an enormous variety of sizes and models.

Push Button Pendants

Our ergonomic pendants are ideally suited for industrial control applications. They are available in a wide range of configurations for overhead cranes and other machinery.

Radio remote controls

Safe, secure, and reliable radios use the latest in microprocessor technology. Available in several models for overhead crane control and other types of machinery.

Inductive Power Transfer IPT®

The contact-less system for transferring energy and data. For all tasks that depend on high speeds and absolute resistance to wear.

Energy guiding chains

The "Jack of all Trades" when it comes to managing energy and data cables and air and fluid hoses. A wide range of energy guiding chains are available for many industrial applications.

Air hoists and balancers

ENDO Air hoists accurately place delicate loads and continuously vary the speed for precise positioning. They run cool in continuous operations.

Bumpers

Conductix-Wampfler offers a complete range of bumpers for the auto industry, cranes, and heavy machinery. These include rubber, rubber/metal, and cellular types.

Spring balancers and retractors

ENDO spring balancers by Conductix-Wampfler are rugged, reliable high-precision positioning devices that reduce operator fatigue and assist with accurate tool placement.

www.conductix.us

USA / LATIN AMERICA
10102 F Street
Omaha, NE 68127

Customer Support
Phone +1-800-521-4888

Phone +1-402-339-9300
Fax +1-402-339-9627

info.us@conductix.com
latinamerica@conductix.com

CANADA
1435 Norjohn Court
Unit 5
Burlington, ON L7L 0E6

Customer Support
Phone +1-800-667-2487

Phone +1-450-565-9900
Fax +1-450-951-8591

info.ca@conductix.com

MÉXICO
Calle Treviño 983-C
Zona Centro
Apodaca, NL México 66600

Customer Support
Phone (+52 81) 1090 9519
(+52 81) 1090 9025
(+52 81) 1090 9013

Fax (+52 81) 1090 9014

info.mx@conductix.com

BRAZIL
Rua Luiz Pionti, 110
Vila Progresso
Itu, São Paulo, Brasil
CEP: 13313-534
Customer Support
Phone (+55 11) 4813 7330

Fax (+55 11) 4813 7357

info.br@conductix.com

Contact us for our Global Sales Offices

© Conductix-Wampfler | 2017 | Subject to Technical Modifications Without Prior Notice

CAT1003.1.24

CONDUCTIX wampfler
DELACHAUX GROUP